International Review of Management and Marketing

ISSN: 2146-4405

available at http: www.econjournals.com

International Review of Management and Marketing, 2026, 16(3), 267-279.

Beyond the Label: Multidimensional Brand Equity Driving Apparel Visibility Through Customer Satisfaction

Mercy Nwadiuto Obeto*, Rudzi Binti Munap

Faculty of Business, UNITAR International University, 47301, Petaling Jaya, Selangor, Malaysia. *Email: mercy_obeto@yahoo.com

Received: 29 September 2025 **Accepted:** 21 February 2026 **DOI:** https://doi.org/10.32479/irmm.22514

ABSTRACT

Apparel brand companies need strong brand visibility and multidimensional brand equity to satisfy customers and remain relevant in a competitive market. The study examined the relationship between perceived quality, brand attitude, purchasing behaviour, on brand visibility, and the mediating role of customer satisfaction. A quantitative research design was employed with the use of simple random sampling; 363 questionnaires was disseminated online using google forms to apparel brands customers in Klang Valley using 5-point Likert scale. The measurement model confirms that the model fits the data. The structural equation model analysed the hypothesised relationship between the variables. The findings of the study indicated that there was a significant positive relationship between perceived quality, brand attitude, customer satisfaction, and brand visibility. However, there was no significant relationship between purchasing behaviour and brand visibility. Customer satisfaction does not mediate the relationship between perceived quality and brand visibility. Furthermore, customer satisfaction mediates the relationship between brand attitude, purchasing behaviour, and brand visibility. The study offers practical and theoretical contribution for apparel brand companies, guiding them in strengthening their brands' multidimensional equity across different market segments, improve visibility by focusing on customer satisfaction.

Keywords: Brand Visibility, Brand Attitude, Customer Satisfaction, Perceived Quality, Purchasing Behaviour
JEL Classifications: L67, M31

1. INTRODUCTION

Brand visibility is a phenomenon where a customer can recognise or recall a particular brand when all market conditions are the same. According to Frederiksen (2023) whether a company sells a consumer commodity like apparel or a professional service like accounting, its brand is its personality. Gaining brand visibility begins with being seen by the ideal customer but that does not ensure purchases are made. Customers are individuals, and individuals are motivated by emotions (Zwakala, 2020). As a result, the company will attract more customers if their audience notices and appreciate the company's presence, in this context the brand becomes significant. There are two elements that is needed in order for brands to stand out to their customers: engaging brand experience and consistency. Making a compelling brand experience that endures over time entails developing a narrative that goes beyond company's offerings in terms of goods and services (Zwakala, 2020). Extensive and dynamic brand visibility studies over years have showed that predictor variables assume direct relationship with brand visibility. According to Singh and Pardesi, (2019) study, the visibility of an apparel brand product is the totality of its intangible attributes, a brand encompasses more than merely a product, identity, or logo (Singh and Pardesi, 2019). Shahzad et al. (2019) study is consistent with (Almansour et al., 2019) which illustrated that customer satisfaction was not a full mediator but significantly mediated the relationships between the predictor variables, the study also showed that customer satisfaction levels affect brand equity. Brands have the power to emotionally connect with their customers, making them become iconic entities.

There is a notion that an apparel brand has its own distinct equity and brand visibility, and that for its customers, one of the primary

This Journal is licensed under a Creative Commons Attribution 4.0 International License

objectives of brand visibility is to draw in target audiences by enhancing the area's value proposition through its unique character (Bose et al., 2022). According to Pham (2020) research model which indicated a positive relationship between brand equity and brand awareness, indicating a significant impact on a company's performance. Furthermore, market segmentation analysis is needed to improve brand visibility, these distinct connotations are long-lasting and aspirational for the target audience, which the location marketer attempts to capitalise on. The concept of quality is ubiquitous in everyday life, encompassing food, lifestyle, consumer goods, and living situations. Although its definition is imprecise, it often guides customer decisions in the context of apparel, given that quality is a multifaceted issue (Aakko and Niinimaki, 2021). Quality is evaluated on an individual basis during the purchase, utilization, maintenance, and ultimately, the decision to dispose of unnecessary apparels. Fagundes et al. (2022) study revealed a low correlation coefficient, yet a positive relationship between brand visibility and perceived quality. The study showed that brand visibility does not necessarily increase perceived quality. There has been a noticeable change in the customer-brand power axis due to the fact that customers are more knowledgeable, which have increased purchase options. These phenomena are essential to understanding the current issue, which is that customers review of a product is disrupting the existing visibility of the brand. Through enhancing their brand visibility in the market, companies can benefit from improved brand attitude and attract more customers. According to Kotler et al. (2022) brand attitude is the aggregate opinion of customers towards a given product, it is determined through the feedback loop. The concept or object's behaviour can be reflected by one's attitude, which causes an emotional reaction, cognitive level, and behavioural propensity.

Francis et al. (2023) define customer purchasing behaviour as the examination of individuals, groups, companies, and the strategies they utilize to choose products, experiences, or innovations that fulfil their wants and influence society and customers. Shaikh et al. (2018) study indicated that Social Media Network Brand Visibility (SNBV) significantly impacts purchasing behaviour and brand equity. Measured psychometrically, SNBV affects product evaluation, value equity, brand awareness, and purchasing behaviour. Brand visibility is essentially the same metric as brand awareness, with the difference that it focuses on assessing awareness during the actual purchasing decision rather than general brand visibility. Apparel brand companies have a number of issues such as product quality, attitudes and customer behaviour as a result of the interaction between online customers, making them unsure of how to modify their communication strategies in light of brand visibility (Hermanus, 2022). Fagundes et al. (2022) claims align with the studies by Moeliono et al. (2020) and Munaier et al. (2021), indicating a strong relationship between awareness and brand equity qualities. Awareness and perceived quality are impacted by influence on culture, which in turn affects a company's product quality (Appel et al., 2020). The gap of this study uses a multiple relationship model to diagnose brand visibility and perceived predictor variables in product manufacturing and service-provider companies. Both aspects cover the inclusion of multidimensional brand equity namely, perceived quality, brand attitude, purchasing behaviour, which are products of customer psychology. Furthermore, this study examines the mediating role of customer satisfaction between multidimensional brand equity and brand visibility of apparel brands.

1.2. Research Questions

- RQ1: Is there a relationship between perceived quality and brand visibility of apparel brands?
- RQ2: Is there a relationship between brand attitude and brand visibility of apparel brands?
- RQ3: Is there a relationship between purchasing behaviour and brand visibility of apparel brands?
- RQ4: Does customer satisfaction mediate between perceived quality and brand visibility of apparel brands?
- RQ5: Does customer satisfaction mediate between brand attitude and brand visibility of apparel brands?
- RQ6: Does customer satisfaction mediate between purchasing behaviour and brand visibility of apparel brands?
- RQ7: Is there a relationship between customer satisfaction and brand visibility of apparel brands?

2. LITERATURE REVIEW

2.1. Brand Visibility

Apparel brands are significant assets intricately linked to customers' self-concept and expression (Rosihan and Aris, 2022). The objective of brand visibility is to ensure the brand remains "top of mind" for its target audience, hence facilitating the decision-making process during selection (Rahul, 2024). This can be perceived as a funnel wherein brand visibility enhances the probability that a prospective customer would contemplate whether or not a brand suits their preference and if they would rather purchase from an alternative brand (Rahul, 2024). Enduring and striving amidst globally recognized brands Like Adidas, Puma, H and M, Gucci, Nike, Louis Vuitton, etc., is one example of how the visibility of a well-built brand that still follows ideal values can generate positive brand visibility in the future (Razak et al., 2020). Therefore, brand visibility is a necessity for purchasing behaviour, which may be attained through the perceived quality of the brand, ultimately influencing the decision to purchase. Many customers, seeking to acquire and utilize superior quality, safer, and more sustainable market products, demand greater transparency from brands (De Ruyter et al., 2022). In response to this developing customer inclination, study conducted by (Fashion Revolution, 2023) an apparel brand company, highlights the transparency of product origin as a vital strategic objective to restore customer confidence and regain brand trust. Brand visibility is of paramount importance as it is distinctive to each brand and challenging for competitors to replicate. In the world of apparel companies, authenticity has emerged as a critical determinant in customer decision-making, enabling brands to command premium pricing for their items, leading to brand preference and increasing the willingness to pay a premium price (Viloma and Junge, 2023). According to Taqi and Muhammad (2020) study which advanced perceived quality and brand visibility are positively associated, stating that a satisfied customer is one who has aligned their view of a product with the utility gained through experience. This resulted in customer satisfaction to be completely dependent on all

other aspects that determine a company's brand hence reflecting the product's brand equity (Taqi and Muhammad, 2020), thereby supporting the conceptual framework for this study. Azzari and Pelissari (2021) study concluded that brand awareness which is a level of brand visibility has an indirect impact on purchasing behaviour. Khurram et al. (2018) study showed that there was a positive significant relationship between brand recognition and actual purchase. Brand visibility grows over time as people get more familiar with a brand because of more trustworthy products and a better customer experience.

2.2. Customer Satisfaction

Customer satisfaction refers to how happy customers are after utilizing a product that meets their wants and desires (Diputra and Yasa, 2021). According to Lee et al. (2020), customer satisfaction comprises both emotional and cognitive responses subsequent to product usage, or what is commonly referred to as customer brand response. Enhancing customer satisfaction can improve brand visibility among customers, (Devi and Yasa, 2021; Moksin et al., 2023) asserted that customer satisfaction positively influences brand visibility in their study. Moreover, when customers believe that the company's products are not worth the financial sacrifices they identify with, they become dissatisfied with the company. Conversely, apparel brands customer will be satisfied if their expectations are met or surpassed. The study findings of Diputra and Yasa (2021) support Wantara and Irawati (2021), indicating that customer satisfaction is positively and significantly impacted by product quality. This explains that customers exhibit more satisfaction with apparel companies when the products have superior quality. The quality of the apparel brands will determine the degree of customer satisfaction, in order for customers to express their feelings of satisfaction or discontent (Veybitha et al., 2024). Similarly, customer satisfaction has focused primarily on dimensions of brand equity such as perceived quality, brand attitude, on satisfaction (Seftylia and Cholil, 2022). However, Shukri et al. (2020) stated that in service contexts, assessing the impact of quality, value, and customer satisfaction on purchase behaviour results both direct and indirect effects on service value and behavioural intentions. Koay et al. (2020) advanced that the theory of customer-based brand equity explains that companies require adequate resources, expertise, and experience to execute an innovative quality-focused strategy that facilitates the attainment of competitive advantage, culminating in a high-performing and superior company. Customers see quality as a support mechanism rather than a competitive advantage (Shukri et al., 2020).

2.3. Underpinning Theory

According to Aaker (1991) in Anchidin and Bigert (2023), brand equity makes the product and services offered by the company more valuable to their customers. Keller (1993) in Dharmawan and Hendrayati (2019) stated that brand visibility is the customers' ability to recall and recognize the brand. Furthermore, Keller (1993) in Singh and Pardesi (2019) developed the Theory of Customer Brand Equity (CBBE) that divides brand knowledge into two parts: brand awareness and brand image. Customers should be familiar with a brand name that have a positive brand image as well as brand visibility which is also favourable, strong, and distinctive. This study conceptualized brand equity based on Aaker (1991) in Anchidin and Bigert (2023) and (Keller, 1993) in (Dharmawan and Hendrayati, 2019) in terms of three dimensions namely, perceived quality, brand attitude, and purchasing behaviour.

The Theory of Planned Behaviour (TPB) is a well-liked conceptual framework for studying human behaviour (Ajzen, 2002) in (Tseng et al., 2022). This theory assumes that since most human behaviours are controlled by will, the desire to partake in specific actions serves as a dependable predictor of actual behaviour (Ajzen, 2020). In this study, purchasing behaviour was defined as an internal state that directs one's experience and attention toward a certain behaviour pattern or object. Furthermore, it is assumed that the amount of effort intended to carry out a specific behaviour reflects purpose (Ajzen, 2020). Regarding brand visibility, an apparel brand company's attitude pertains to their positive or negative assessments of their products and introducing a new product to the market; subjective norms are their interpretation of the expectations and social pressure of customers and competitors, purchasing behaviour is their perception of the level of control over their products in the market (Tseng et al., 2022). This study adopted the TPB and theory of customer-based brand equity (CBBE) in the light to examine the variables in this study, focusing on the main factor which will guide the understanding of multidimensional brand equity, and brand visibility of apparel brands as illustrated in Figure 1 below. Personal attitudes, beliefs, social norms, and behavioural intention are key components of these theories (Ajzen, 2020).

2.4. Perceived Quality and Brand Visibility

Brand visibility and perceived quality are two aspects of a brand's potential to improve or diminish the brand's value, as evidenced by customer reactions to the goods or services offered (Supiyandi et al., 2022). Aaker (1996), as cited in Dharmawan and Hendrayati (2019), explained that the customers' perceptions of the quality or excellence of a product or service as a whole are associated with the expected intention. As a result of this, the customer's subjective evaluation of the product's quality (rather than that of management or an expert) is the component that determines the perceived quality of the product. Perceived quality refers to a customer's assessment of the overall quality or excellence of a product or service in respect to their desired objectives (Samsa, 2023). According to Yang and Lee (2019), experienced shoppers are able to identify the quality of a product by going through the process of directly experiencing it, hence price is not a quality indication for them. Furthermore, Padval and Maurya (2021), stated that an unskilled shopper is more likely to rely on high reference prices and find opportunities to purchase items at a discount. Maharani (2023), advanced that price is useful not only for determining the quality of an item but also for determining the amount of money that will be required to purchase that item. Visually appealing elements, like colour, design, and professional production, can enhance the allure of content and capture customers' attention (Rogojina et al., 2023). Simultaneously, the pertinence of the provided information, including the latest apparel brands, style recommendations, and insights on manufacturing sustainability, can enhance customer confidence in the company. According to Nisa et al. (2024), brands that actively connect with their audiences demonstrate that they care about the opinions

and desires of their customers. This can result in an increase in perceived quality, a feeling of engagement among customers, and exposure for the brand. The following hypothesis was developed after carefully reviewing existing literature on perceived quality and brand visibility.

- H_1: There is a significant positive relationship between perceived quality and brand visibility.

2.5. Brand Attitude and Brand Visibility

Brand attitude as defined by Razak et al. (2020), refers to the extent to which customers have confidence in a brand or product. Branding methods serve as a means for companies to convey the significance of their products and enhance their visibility in the market (Stengel et al., 2023). According to Foroudi et al. (2021) the negative or positive attitude that is expressed because of a brand or towards a brand is also referred to as brand attitude. The study by Foroudi et al. (2021) demonstrated a substantial positive correlation between brand attitude and brand awareness, which pertains to the degree of brand visibility. Products that are successful in the market have a vivid logo, and are brief in terms of words, they are also easy to remember (Silva et al., 2020). Kim and Park (2023) assert that a branded product is crucial for the efficacy of brand visibility, as it positively influences attitudes toward visibility. Psychological aspects of brand attitude influence how customers perceive, understand, and educate themselves about their favourite apparel brands. Moreover, the realm of apparel brands is increasingly aligned with the twenty-first-century customer, creating a novel paradigm of luxury (Xu, 2025). However, it is essential to keep in mind that increasing brand visibility and fostering a favourable brand perception are both strategies that can be accomplished through the utilization of brand attitude (Nagpal and Gupta, 2023). According to Razak et al. (2020), brand attitude may be intricately cultivated through factors such as immediate market presence, a sense of pride in brand ownership, and the capacity to influence customer cognition. The role of confidence in a brand is fulfilled when the service provided to customers is exceptional, a process that occurs not only during the purchase but also subsequently. Chetioui et al. (2020) elucidate that customers with a positive attitude of a brand are more inclined to make a purchase. Due to the fact that customers' decisions to purchase and adore a particular brand are unquestionably dependent on sufficient and cognitive attitudes according to the Theory of Planned Behaviour (TPB), which explains that this is subsequently represented as behavioural attitudes. Therefore, in light of prior research regarding brand attitude and brand visibility, the study presents the following hypothesis.

- H_2: There is a significant positive relationship between brand attitude and brand visibility.

2.6. Purchasing Behaviour and Brand Visibility

Purchasing behaviour denotes the action undertaken by customers towards a given product, since a brand's favourable reputation among customers encourages their purchasing behaviour. According to Faisal and Ekawanto (2021), brand visibility has a favourable and significant impact on customers' purchasing behaviour, this is an assertion that customers buy both the product and the brand. Moreover, Permana (2021) stated that purchasing behaviour significantly influences brand image and brand visibility. Customers will develop brand visibility if they have a consistent impression of a brand after using it, leading them to believe that this is the only brand that is deserving of being chosen in the market for similar goods (Swaminathan et al., 2020). Customers' memories serve as the foundation for their view of a brand, whereas brand visibility is what they remember about it (Alhamdina and Hartono, 2023). However, a solid brand will reassure the commitment to quality but branding that is provided or created serves as more than just a sign because it influences customer satisfaction and trust, which in turn influences customers purchasing behaviour (Permana, 2021; Hashim et al., 2024). Gunawan et al. (2021) advanced that brand visibility has an insignificant but positive relationship on purchasing decisions; despite customer awareness of the company's products and services, they do not necessarily deliberate extensively on their purchasing choices. This may arise from various factors, one being insufficient brand visibility among customers, which hinders their purchasing of the promoted goods or services. Companies compete to win customers by utilizing a variety of marketing strategies, a strong brand visibility is frequently demanded from a company (Febriyantoro, 2020). However, Shen and De-la-Garza (2019) conducted a study that found that influencers can increase brand visibility and encourage customer interest of making purchases. The following hypothesis was developed after carefully reviewing existing literature on purchasing behaviour and brand visibility.

- H_3: There is a significant positive relationship between purchasing behaviour and brand visibility.

2.7. Perceived Quality and Customer Satisfaction

Customers who embrace innovation in apparel products may exhibit more brand loyalty given the quality of the brand. According to Wahyadyatmika and Mahyuni (2025), the quality of the product is also crucial in the process of innovation. The perception of quality must be prioritized to ensure that customers are quickly attracted to the goods upon first view. Perceived quality significantly impacts customers satisfaction with the brand, since quality conveys a positive identity to customers, leading to their allegiance of the apparel brand, due to its exceptional comfort that enhances the shopping experience (Wahyadyatmika and Mahyuni, 2025). Customer satisfaction is defined as the degree to which a product or service either meets or exceeds the expectations of a customer (Bezes, 2022). According to Cuong and Khoi (2019), in today's intensely competitive business environment, the contentment of customers might be considered the most important factor in determining success. The study stated that there was a positive significant relationship between the perceived quality of a product or service and the level of satisfaction experienced by the customer. The apparel industry is recognized as a key sector globally, significantly influencing economic and cultural dynamics. Apparel transcends mere customer goods, embodying individual and collective identity while facilitating the expression of lifestyle, values, and beliefs. Crucially, sustaining customer satisfaction and fostering long-term connections are essential for success in this industry (Amin-Tahmasbi and Zahedan, 2022). According to the customer-based brand equity Aaker (1996) in Anchidin and Bigert (2023) the perceptions of customers seem to compare their satisfaction with one product to that of other products in the market. Izzudin and Novandari (2018) assert that customer

satisfaction and perceived quality exhibit a positive relationship. The study conducted by Kataria and Saini (2020) indicated that customer satisfaction partially affects perceived quality, offering empirical evidence for the relationship between customer-based brand equity and customer satisfaction. Kataria and Saini (2020) concluded that customer satisfaction is significantly and positively affected by perceived quality, noting that perceived quality is the most important variable influencing customer satisfaction. Furthermore, Taqi and Muhammad (2020) study substantiates customer satisfaction as a mediating variable, supporting the findings of (Gök et al., 2019), which indicate a positive correlation between perceived quality and customer satisfaction. The following hypothesis is developed after carefully reviewing existing literature on perceived quality and customer satisfaction.

- H_4: Customer satisfaction mediates the relationship between perceived quality and brand visibility.

2.8. Brand Attitude and Customer Satisfaction

Brand attitude is important for marketing researcher to investigate given that marketing efforts are currently trying to change customers' attitudes towards brands. Companies that create attractive and effective advertisements, increases satisfaction, and create continuous customer loyalty for more productivity (Azizan and Yusr, 2019). According to Ajzen (2020), the Theory of Planned Behaviour (TPB) is the customer's emotion or attitude toward a good or service after using, it was another definition of customer satisfaction. Positive brand attitudes are produced by brands that are visible and well-liked by their target audience. These customers are a company's major source of funding, thus cultivating their loyalty does not require huge marketing budgets. Smith (2020) observed that customer satisfaction was positively correlated with brand attitude, in addition, Suetrong (2023) stated that in order for customers to develop a favourable attitude toward a brand, companies must continually remind them of the benefits that the product or service offers. According to Arghashi et al. (2021), brand attitude positively correlates with customer satisfaction, and the study revealed that customer satisfaction partially mediates the relationship between brand attitude and brand visibility. Customer retention and referral participation in the apparel industry depend on keeping customers satisfied (Gazi et al., 2024). According to Garga et al. (2019), customer satisfaction among mobile phone users has a positive relationship with attitude towards switching brands, indicating that satisfied customers are less like to switch brands than the unsatisfied customers. The following hypothesis is developed considering the literature previously stated on brand attitude and customer satisfaction.

- H_5: Customer satisfaction mediates the relationship between brand attitude and brand visibility.

2.9. Purchasing Behaviour and Customer Satisfaction

Customer purchase behaviour signifies the subjective probability or tendency of customers to obtain particular goods or services (Wang et al., 2023). Customers' purchasing behaviour represents their preliminary assessment and subjective inclination before engaging in purchasing activity, hence enabling a more accurate prediction of such behaviour (Zhang and Huang, 2024). Customer demand can be shaped and enhanced by deliberately creating external stimuli, while catching the customer's attention is crucial for marketing success. Brands that utilize superior visual design can more effectively capture customer interest in purchasing, extend their time in the store, and convert prospective shopping needs into actual purchases. Customers' attitude of brands and their positive purchasing behaviour is influenced by customer satisfaction (Wong et al., 2019). Xiao et al. (2019) posited that customers' assessments of a product post-use and their evaluations of production services, based on comparisons with products that are similar from competing companies within the same industry, are both indicators of satisfaction. Yasri et al. (2020) assert that brand preference mediates the relationship between customer satisfaction and purchasing behaviour, with a positive correlation existing between brand preference and perceived quality through equity perceptions, wherein purchasing behaviour constitutes a dimension of brand equity. In addition, Ilyas et al. (2020) state that there is a positive correlation between the level of satisfaction experienced by customers and their decision-making regarding purchases. Mawaddah et al. (2024) theoretical model of customer satisfaction explains that the assessment of customer satisfaction takes into consideration both the experience of the customer and their expectations of the brand. Therefore, the following hypothesis is proposed.

- H_6: Customer satisfaction mediates the relationship between purchasing behaviour and brand visibility.

2.10. Customer Satisfaction and Brand Visibility

Brands are omnipresent and distinctly varied, they dominate markets encompassing both fundamental products, sophisticated services and they distinguish themselves across various positioning dimensions, including price, and brand visibility. In recent years, brands have embraced inclusive marketing, featuring models that align with customers' self-concept to express distinctiveness in their marketing strategies. This strategy has fostered brand visibility among customers by aligning their self-image with the brand image, as representation attracts the customers to purchase the company product (An et al., 2020). Additionally, several customers utilize apparel brands to construct their personal identity, while others employ use it to convey their identity to others (Raffaelli et al., 2025). According to Swasty and Mustafa (2022), the term brand visibility refers to the characteristics of the product, such as its design, construction, and packaging, as well as other features that set it apart from competing products. Customers can use brand visibility to distinguish between rival brands and purchase those that are most suited to their preferences and desires. As a result, customers are satisfied and have long-term relationships with the brand (Bañares et al., 2022). According to the theory of Customer-Based Brand Equity, customers' satisfaction is stimulated by brand visibility (Malik and Muthohar, 2023). Furthermore, Rodrigues (2022) found that a company's success is determined by its brand visibility and customer satisfaction. This results that companies must consider brand visibility when establishing marketing tactics. Brand visibility not only communicates with customers, but it also portrays the quality and attributes that promote long-term customer relationships. Ilyas et al. (2020) found a positive significant relationship between brand visibility and customer satisfaction, leading many companies to invest significantly in enhancing their brand visibility. Brands like people have a personality according to the Theory of Planned Behaviour, this

Figure 1: Brand visibility conceptual framework

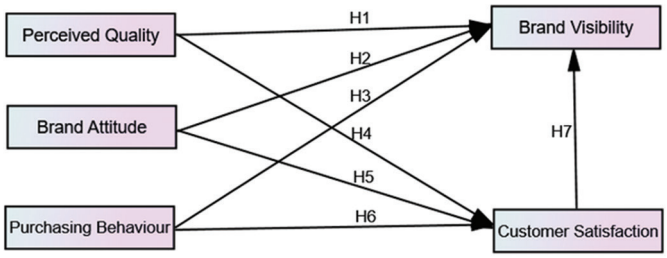

is referred to as a brand persona, customer and brand personality features are comparable, which not only attracts customers but also increases their satisfaction (Taqi and Muhammad, 2020). Furthermore, according to Taqi and Muhammad (2020), brand visibility and customer satisfaction have a direct and indirect impact on customer relationships and satisfaction levels. The study findings indicated that establishing and sustaining a strong brand visibility is critical, and quality perceptions are more important to customers than real quality. Based on the discussion and literature mentioned above, the hypothesis is as follows:

- H_7: There is a significant positive relationship between customer satisfaction and brand visibility.

3. METHODOLOGY

This study applied quantitative research design based on the interest of examining the relationship of the independent variables namely, perceived quality, brand attitude, and purchasing behaviour, to the dependent variable namely, brand visibility while also examining the mediating effect of customer satisfaction on both the independent variables and dependent variable. The population for this study were customers of the selected apparel brands residing in Klang Valley. The unit of analysis was individual level, this study employed probability sampling using the lottery method of random sampling. The primary method of data collection was the questionnaire which was distributed to 363 respondents the questions were all adopted and adapted from reliable sources. Perceived quality was measured using 5 statements adopted from (Yang and Lee, 2019; Kataria and Saini, 2020), brand attitude 6 statements from (Kusumawardani and Purniasari, 2021; Uribe et al., 2022), purchasing behaviour 5 items from (Nguyễn, 2019; Rahman et al., 2020), customer satisfaction 4 item from (Rita, 2019; Kataria and Saini, 2020), and brand visibility 5 items from (Rahman et al., 2020; Shao et al., 2019). The pilot study questionnaire was distributed to 37 respondents, and the Cronbach alpha values were as follows: perceived quality (0.924), brand attitude (0.875), purchasing behaviour (0.890), customer satisfaction (0.901), and brand visibility (0.900), these values were between good to excellent according to (Hair et al., 2022). The descriptive statistics was calculated using Statistical Package for the Social Sciences (SPSS, version 30.0) to analyse the demographic profile of the respondents. The inferential statistics was conducted using the Analysis of Moment Structures (AMOS, version 29 software) to evaluate the Confirmatory Factor Analysis (CFA) and Structural Equation Model (SEM).

Figure 2: Measurement model

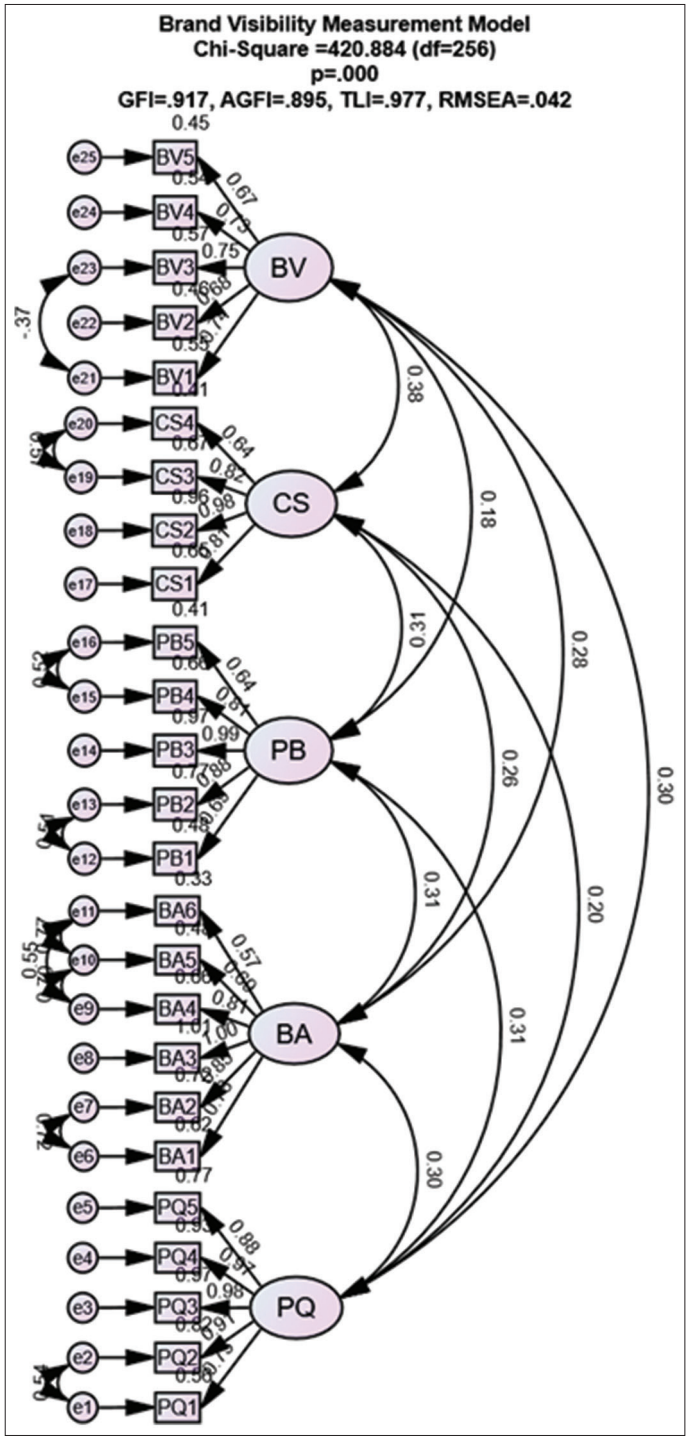

Source: Author's own work

4. RESULTS AND DISCUSSION

The demographic profile analysis in this study is based on descriptive analysis. The profile consists of gender, race, age, marital status, occupation, highest level of education, monthly income, preferred brands, and location. The analysis is represented in the form of frequency and percentages as illustrated in Table 1 below.

Table 1: Demographic profile

Demographic factors	Categories	Frequency	Percentage
Gender	Male	182	50.1
	Female	181	49.9
Race	Malay	178	49.0
	Chinese	107	29.5
	Indian	53	14.6
	Others	25	6.9
Age	18-29	91	25.0
	30-39	159	43.8
	40-49	87	24.0
	50-59	26	7.2
Marital Status	Single	198	54.5
	Married	165	45.5
Occupation	Government Employee	72	19.8
	Private Employee	141	38.8
	Self-employed	25	6.9
	Student	125	34.5
Highest Education	Secondary Level	4	1.1
	Diploma	35	9.6
	Bachelor's Degree	132	36.4
	Masters	158	43.5
	PhD	34	9.4
Monthly Income	Less than RM 2,000	23	6.4
	RM 2,001-RM 4,000	64	17.6
	RM 4,001-RM 6,000	101	27.8
	RM 6,001-RM 8,000	81	22.3
	Above RM 8,000	94	25.9
Preferred Brands	Adidas	74	20.4
	H&M	65	17.9
	Cotton-On	61	16.8
	Padini	81	22.3
	FOS	63	17.4
	Others	19	5.2
Location	Gombak	46	12.7
	Klang	94	25.9
	Kuala Lumpur	89	24.5
	Petaling	71	19.6
	Ulu Langat	46	12.7
	Others	17	4.6

4.1. Measurement Model

The study conducted the Confirmatory Factor Analysis (CFA) to evaluate the internal validity and reliability of the study. The measurement model as shown in Figure 2 below, was used to analyse the correlational relationships between the constructs and to determine its goodness of fit. Measurement model that is robust enhances the structural model and eliminate unnecessary measured items (Hair et al., 2022). The measurement model evaluated the Confirmatory Factor Analysis (CFA) using 25 items, as indicated in Table 2 below the factor loadings were between 0.575 to 1.004 (>0.50). The mean values ranged between 4.67 to 4.83, standard deviation 0.38 to 0.53, and Cronbach alpha were between 0.829 to 0.954. The model fit indices indicated that the minimum was achieved, the CMIN value = Chi-Square/Degrees of Freedom (χ^2/df) = 420.884/256 = 1.644. The CMIN value (1.644 < 2), P-value (0.000, < 0.05), GFI (0.917), AGFI (0.895), TLI (0.977), CFI (0.980), RMSEA (0.042). These finding satisfies the minimum threshold indicating that both goodness and badness of fit index have been analysed (Hair et al., 2022).

Table 3 below shows that the Construct Reliability (CR) values 0.840 to 0.911, was all above 0.70 (Hair et al., 2022). The Average

Table 2: Findings of confirmatory factor analysis (CFA)

Constructs	Item	Standardized factor loadings (> 0.50)	Cronbach alpha (> 0.70)	Mean	Standard deviation
Perceived Quality	PQ1	0.745	0.954	4.82	0.39
	PQ2	0.906			
	PQ3	0.984			
	PQ4	0.966			
	PQ5	0.877			
Brand Attitude	BA1	0.785	0.928	4.76	0.43
	BA2	0.850			
	BA3	1.004			
	BA4	0.810			
	BA5	0.694			
	BA6	0.575			
Purchasing Behaviour	PB1	0.690	0.905	4.83	0.38
	PB2	0.878			
	PB3	0.985			
	PB4	0.811			
	PB5	0.641			
Customer Satisfaction	CS1	0.808	0.893	4.81	0.39
	CS2	0.980			
	CS3	0.820			
	CS4	0.640			
Brand Visibility	BV1	0.744	0.829	4.67	0.53
	BV2	0.678			
	BV3	0.754			
	BV4	0.733			
	BV5	0.667			

Variance Extracted (AVE) values ranged between 0.513 to 0.809 (>0.50), indicating that the values were greater than the squared inter-construct correlation, explaining the convergence and discriminant validity measures according to (Hair et al., 2020).

4.2. Structural Equation Modeling (SEM)

The structural equation modeling in Figure 3 below, shows that a construct is a preconceived variable that is as a result of measured items or observed value, constructs can be exogenous or endogenous (Kline, 2023). This study structural model examines the relationship between the independent variables, the mediating variable, and the dependent variable. The findings of the standardized estimate for perceived quality to brand visibility was (0.20), brand attitude to brand visibility (0.14), purchasing behaviour to brand visibility (−0.02), perceived quality to customer satisfaction (0.07) brand attitude to customer satisfaction (0.17), purchasing behaviour to customer satisfaction (0.24), and customer satisfaction to brand visibility (0.31) respectively. The findings from the Amos output illustrated that the R-squared value was (0.216), indicating that perceived quality, brand attitude, purchasing behaviour, and customer satisfaction can explain 21.6% of brand visibility.

The findings of the structural equation model indicated that there was a significant positive relationship between perceived quality and brand visibility (0.000, P < 0.05) supporting H_1. This finding indicates that an increase in perceived quality will enhance the brand visibility of apparel brands in the market. The findings of this study are consistent with (Supiyandi et al., 2022; Ahmed et al., 2023). In this digital age emotional and psychological factors affects customer expectation through brand visibility. The ability

Table 3: Discriminant validity

Constructs	Construct reliability (>0.70)	PQ	BA	PB	CS	BV
Perceived Quality	0.955	**0.809**				
Brand Attitude	0.911	0.093	**0.636**			
Purchasing Behaviour	0.903	0.099	0.094	**0.657**		
Customer Satisfaction	0.890	0.038	0.068	0.096	**0.674**	
Brand Visibility	0.840	0.090	0.078	0.034	0.146	**0.513**

AVE values are shown on the diagonal (bold) (> 0.50) (Hair et al., 2022)

Figure 3: Structural model

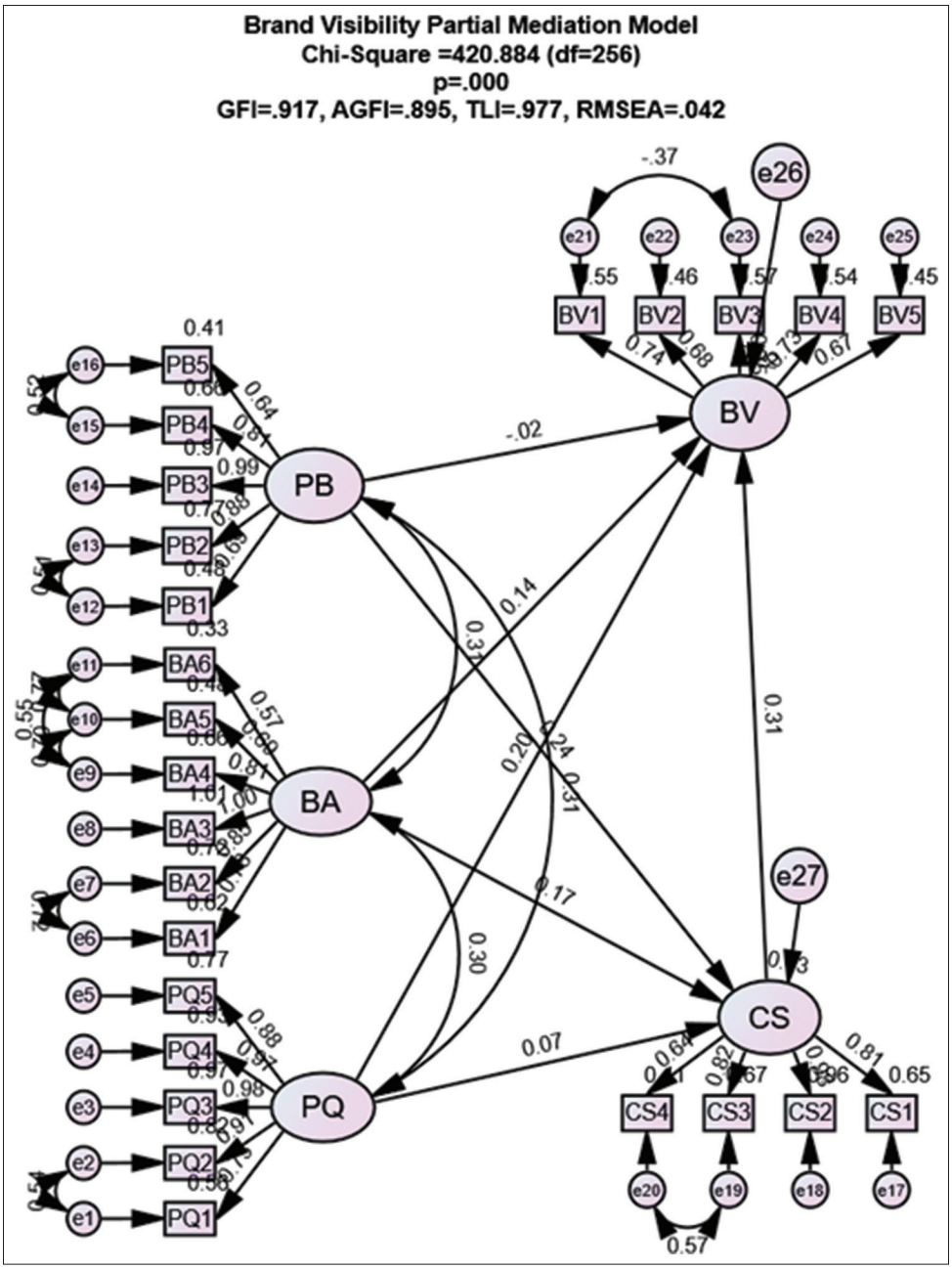

of the apparel brand to meet the customers demand is part of what drives a brand visibility in the market. There was a significant positive relationship between brand attitude and brand visibility (0.011, $P < 0.05$) hence, H_2 supported. A brand's attitude towards a brand drives a customer perception about the brand, especially when all the psychological factors are playing their role in the marketing sectors. This finding supports (Uribe et al., 2022) study that brand recognition, brand recall and brand awareness are all levels of brand visibility, this is part of the factors that elevate brand presence in a competitive market. Apparel brand's attitude can be intricately shaped by associations with the brand itself, such as quick market presence and a sense of pride in owning the brand. However, there was no significant relationship between purchasing behaviour and brand visibility (0.727, $P > 0.05$)

Table 4: SEM hypotheses testing and mediating effect

Hypotheses	Constructs	Estimate	S.E.	C.R.	P	Findings
H_1	Brand Visibility <--- Perceived Quality	0.238	0.068	3.503	0.000	Supported
H_2	Brand Visibility <--- Brand Attitude	0.147	0.058	2.547	0.011	Supported
H_3	Brand Visibility <--- Purchasing Behaviour	−0.028	0.080	−0.349	0.727	Not supported
H_4	Brand Visibility <--- Customer Satisfaction <--- Perceived Quality	0.067	0.052	1.278	0.201	Not Supported
H_5	Brand Visibility <--- Customer Satisfaction <--- Brand Attitude	0.139	0.045	3.057	0.002	Supported
H_6	Brand Visibility <--- Customer Satisfaction <--- Purchasing Behaviour	0.264	0.064	4.115	0.000	Supported
H_7	Brand Visibility <--- Customer Satisfaction	0.387	0.073	5.283	0.000	Supported

Estimate of regression weight (Estimate), Standard error of regression weight (S.E.), Critical ratio for regression weight (C.R)

therefore, H_3 not supported. This finding supports (Gunawan et al., 2021) study which stated that a brand with low brand visibility will not get their desired sales in the market. Customers desire enough information to make the right selections of what to buy, a strong brand visibility can provide customers with an immersive online shopping experience and aid in their understanding of product information. Faisal and Ekawanto (2021) study, showed that brand visibility commands purchasing behaviour in a competitive market where every brand is doing their best to stay relevant in order to make their desired sales.

The study finding illustrated that customer satisfaction does not mediate the relationship between perceived quality and brand visibility (0.201, $P > 0.05$) therefore, H4 is not supported. This finding is consistent with (Gálvez-Ruiz et al., 2023; Sudirjo et al., 2024), as opposed to (Uzir et al., 2020) and (Taqi and Muhammed, 2020) study which indicated that customer satisfaction mediates perceived quality. The study findings illustrated that customer satisfaction was not based on perceived quality, this implies that a customer can purchase a high-quality apparel brand and still not be satisfied. Rahuman et al. (2022) assert that customer satisfaction is contingent upon the perceived performance of a product to the buyers' expectation. High-quality products can be marketed for their long lifespan or superior manufacturing techniques, which convey a sense of commitment to offering greater value for the money spent. Customers satisfaction mediates the relationship between brand attitude and brand visibility (0.002, $P < 0.05$) hence, supporting H_5. The study findings support (Smith, 2020; Abin et al., 2022), the mediating effect of customer satisfaction clears the path for apparel brands in the market to increase profitability for the company. When customers are interested to associate themselves with a particular brand due to perceived brand attitude, this increases the brand visibility and drives brand importance in the market. Furthermore, this explains that apparel brand companies depend on keeping their customers satisfied through customer retention, customer satisfaction shapes a customer attitude towards the brand.

Furthermore, the study findings indicated that customer satisfaction mediates the relationship between purchasing behaviour and brand visibility (0.000, $P < 0.05$) therefore, H_6 was supported. The study supports the findings of Ilyas et al. (2020), Kristiawati and Kusmaningtyas (2020), and Leung (2020), which assert that customer satisfaction serves as a mediating variable and exhibits a positive correlation with purchasing behaviour. The ability for a company to design an apparel to fit a customer specification always, leads to an increase in purchasing. This is a factor that makes a customer to advertise or market a brand to their friends and family, due to the fashion statement they make when wearing the brand. The relationship between customer satisfaction and brand visibility was significant and positive as indicated in Table 4 below (0.000, $P < 0.05$) hence, H_7 was supported. This finding supports (Ilyas et al., 2020; Putri and Yasa, 2022; Rodrigues, 2022) which advanced that customer satisfaction and brand visibility has a positive significant relationship. Moreover, apparel brands focus more on maintaining and improving long term relationships, with their customers. This indicates that higher customer satisfaction with an apparel brand correlates with increased brand visibility among customers.

5. CONCLUSION

Brand visibility can be explained using multidimensional brand equity, the nature in which these variables interact with brand visibility as discussed in detail reveals a lot of information. The Theory of Customer-Based Brand Equity according to Anchidin and Bigert (2023) highlighted perceived quality as one of the multidimensional brand equities. Brand visibility with regards to brand attitude is based on psychological need for acceptance of the product. The consumption of a given product rises with increase in the utility that the customer derives from the product, a satisfied customers would always purchase more of the product. In this case purchasing behaviour is formulated based on product use as supported by Theory of Planned behaviour (Ajzen, 2020). The study findings indicated that there was a significant positive relationship between perceived quality, brand attitude and brand visibility. However, there was no significant relationship between purchasing behaviour and brand visibility. Customer satisfaction also drives the independent variables which are the multidimensional brand equity. Customers consider both the cost and the product quality when making purchase of the good or service. However, because each brand has its attitude and customers experience it differently, the perceived quality of same brand may differ from one customer to another. Customer satisfaction does not mediate the relationship between perceived quality and brand visibility. However, the study findings indicated that customer satisfaction mediates the relationship between brand attitude, purchasing behaviour and brand visibility. Customers can develop a steady and engaged mental state known as the cognitive component of customer engagement if an apparel brand company continuously provides high-quality services and a favourable experience.

This study makes a substantial contribution to theoretical understanding because it is a study on multidimensional brand

equity on brand visibility for apparel brands. The study would help inform apparel brand companies on how to use brand visibility as a building block by using different market segment to grow their brands, since the additive effect of brand visibility and customer satisfaction equals brand equity, which is the premium value that a company can generate from a product that is visible. In the branding, management, and marketing field, this study gives empirical data on the mediating effects of customer satisfaction on perceived quality, brand attitude, and purchasing behaviour, on brand visibility. This study would help to inform apparel brands marketing management on how to surpass their competitors and reach salesforce level dominance in the apparel industry. Through the use of foundational strategic element to choose their channels; this helps to conserve their forces and energies keeping them focused on their strongest point. Customers can assess the brand by analysing perceived quality and brand attitude of the brand, by having a feel of the fabric before purchase will give them some sort of satisfaction which drives their purchasing behaviour. Brand visibility is a crucial element for the exposure and sustainability of a startup, as it facilitates customer acquisition and retention amid increasing competition in this digital era. Future studies could examine the difference of brand visibility among various apparel brands and explore the utilization of various social media platforms to enhance brand visibility. The increase of sample size, while employing mixed methods which uses both quantitative and qualitative approaches to gain more insight of customer satisfaction and brand visibility. Future studies should focus on the use of AI generated contents for online marketing and sales by targeting specific audiences and age groups, this would impact apparel brand visibility in the physical market.

6. ACKNOWLEDGEMENT

The authors gratefully acknowledge the financial support provided by UNITAR International University, which facilitated the publication of this article.

REFERENCES

Aaker, D.A. (1991), Managing Brand Value: Capitalizing on the Value of a Brand Name. New York: The Free Press.

Aaker, D.A. (1996), Measuring brand equity across products and markets. California Management Review, 38(3), 102-120.

Aakko, M., Niinimaki, K. (2021), Quality matters: Reviewing the connections between perceived quality and clothing use time. Journal of Fashion Marketing and Management: An International Journal, 26(1), 107-125.

Abin, D.G., Mandagi, D.W., Pasuhuk, L.S. (2022), Influence of brand image on customer attitude, intention to purchase and satisfaction: The case of start-up brand Pomie bakery. Enrichment: Journal of Management, 12(5), 3907-3917.

Ahmed, S., Al Asheq, A., Ahmed, E., Chowdhury, U. Y., Sufi, T., & Mostofa, M. G. (2023). The intricate relationships of consumers' loyalty and their perceptions of service quality, price, and satisfaction in restaurant service. The TQM Journal, 35(2), 519-539.

Ajzen, I. (2002), Perceived behavioural control, self-efficacy, locus of control, and the theory of planned behaviour. Journal of Applied Social Psychology, 32(4), 665-683.

Ajzen, I. (2020), The theory of planned behaviour: Frequently asked questions. Human Behaviour and Emerging Technologies, 2(4), 314-324.

Alhamdina, T.T., Hartono, A. (2023), The impact of brand awareness, brand reputation, and perceived economic benefits on brand trust and online purchase intentions for Scientific products on the TikTok shop platform. International Journal of Science, Technology and Management, 4(3), 653-665.

Almansour, Y., Al-Hajla, A., Almansour, B. (2019), The mediating role of customer satisfaction in the relationship between factors influencing customer loyalty towards financial services in Saudi Arabia. International Journal of Marketing Strategy, Operations Research, and Organizational Behaviour, 32(1), 1132-1140.

Amin-Tahmasbi, H., Zahedan, Y. (2022), Evaluating the performance of the garment industry with an export approach with interpretive structural modelling (ISM). Roshd-e-Fanavari, 4(72), 26-33.

An, N., Zhang, J.L., Cheng, L.D. (2020), Impact of fast fashion brand image on purchasing intention. Journal of Textile Research, 41(8), 108-114.

Anchidin, A., Bigert, S. (2023), Brand Equity in the Twitch Streamers Market: A Quantitative Study of David Aaker's Brand Equity Model [Bachelor thesis, Linnaeus University].

Anchidin, A., & Bigert, S. (2023). Brand equity in the Twitch streamers market: A quantitative study of David Aaker's brand equity model [Bachelor thesis, Linnaeus University].

Appel, G., Grewal, L., Hadi, R., Stephen, A.T. (2020), The future of social media in marketing. Journal of the Academy of Marketing Science, 48(1), 79-95.

Arghashi, V., Bozbay, Z., Karami, A. (2021), An integrated model of social media brand love: Mediators of brand attitude and consumer satisfaction. Journal of Relationship Marketing, 20(4), 319-348.

Azizan, N.S., Yusr, M.M. (2019), The influence of customer satisfaction, brand trust, and brand image towards customer loyalty. International Journal of Entrepreneurship, 2(7), 93-108.

Azzari, V., Pelissari, A. (2021), Does brand awareness influences purchase intention? The mediation role of brand equity dimensions. Brazilian Business Review, 17, 669-685.

Bañares, N.A., Go, J.A., Nuñez, M.A., Taporco, D.P. (2022), The impact of purchasing intentions on retail home improvements in E-commerce on generation Y and Z's brand engagement. Journal of Business and Management Studies, 4(1), 222-232.

Bezes, C.M. (2022), Overall satisfaction formation across channels: An empirical study. International Journal of Retail and Distribution Management, 50(8/9), 922-941.

Bose, S., Pradhan, S., Bashir, M., Roy, S.K. (2022), Customer-based place brand equity and tourism: A regional identity perspective. Journal of Travel Research, 61(3), 511-527.

Chetioui, Y., Benlafqih, H., Lebdaoui, H. (2020), How fashion influencers contribute to consumers' purchase intention. Journal of Fashion Marketing and Management: An International Journal, 24(3), 361-380.

Cuong, D.T., Khoi, B.H. (2019), The effect of brand image and perceived value on satisfaction and loyalty at convenience stores in Vietnam. Journal of Advanced Research in Dynamical and Control Systems, 11(8), 1446-1454.

De Ruyter, K., Keeling, D.I., Plangger, K., Montecchi, M., Scott, M.L., Dahl, D.W. (2022), Reimagining marketing strategy: Driving the debate on grand challenges. Journal of the Academy of Marketing Science, 50(1), 13-21.

Devi, A.A.D.T., Yasa, N.N.K. (2021), The role of customer satisfaction in mediating the influence of service quality and perceived value on brand loyalty. International Research Journal of Management, IT and Social Sciences, 8(3), 315-328.

Dharmawan, F., & Hendrayati, H. (2019). Customer-based brand equity

in digital age: A conceptual approach. KnE Social Sciences, 3(13), 986-1007.

Dharmawan, F., Hendrayati, H. (2019), Customer-based brand equity in digital age: A conceptual approach. KnE Social Sciences, 3(13), 986-1007.

Diputra, I.G.A.W., Yasa, N.N. (2021), The influence of product quality, brand image, brand trust on customer satisfaction and loyalty. American International Journal of Business Management, 4(1), 25-34.

Fagundes, L., Munaier, C.G.E.S., Crescitelli, E. (2022), The influence of social media and brand equity on business-to-business marketing. Revista de Gestão, 30(3), 299-313.

Faisal, A., Ekawanto, I. (2021), The role of social media marketing in increasing brand awareness, brand image and purchase intention. Indonesian Management and Accounting Research, 20(2), 185-208.

Fashion Revolution. (2023), What Fuels Fashion? Fashion Transparency Index 2023. Available from: https://www.fashionrevolution.org/about/transparency

Febriyantoro, M.T. (2020), Exploring YouTube marketing communication: Brand awareness, brand image and purchase intention in the millennial generation. Cogent Business and Management, 7(1), 1-17.

Foroudi, P., Palazzo, M., Sultana, A. (2021), Linking brand attitude to word-of-mouth and revisit intentions in the restaurant sector. British Food Journal, 123(13), 221-240.

Francis, U.O., Haque, R., Rahman, A., Al-Hunaiyyan, A., Al-Ainati, S., Lokman, F.Z.A., Isa, M.B.M. (2023), The impact of digital marketing on consumer purchasing behaviour. International Journal of Operations and Quantitative Management, 29(2), 378-405.

Frederiksen, L. (2023), How to Increase Brand Visibility and Awareness. Hinge Marketing. Available from: https://hingemarketing.com/blog/story/how-to-increase-brand-awareness-and-visibility

Gálvez-Ruiz, P., Calabuig, F., Grimaldi-Puyana, M., González-Serrano, M.H., García-Fernández, J. (2023), The effect of perceived quality and customer engagement on the loyalty of users of Spanish fitness centres. Academia Revista Latinoamericana de Administracion, 36(4), 445-462.

Garga, E., Maiyaki, A.A., Sagagi, M.S. (2019), Factors influencing brand switching behaviour of mobile phone users and the mediating effect of customer satisfaction: A literature review. Journal of Education, Society and Behavioural Science, 29(1), 1-11.

Gazi, M.A.I., Al Mamun, A., Al Masud, A., Senathirajah, A.R.B.S., Rahman, T. (2024), The relationship between CRM, knowledge management, organization commitment, customer profitability and customer loyalty in telecommunication industry: The mediating role of customer satisfaction and the moderating role of brand image. Journal of Open Innovation: Technology, Market, and Complexity, 10(1), 1-12.

Gök, O., Ersoy, P., Börühan, G. (2019), The effect of user manual quality on customer satisfaction: The mediating effect of perceived product quality. Journal of Product and Brand Management, 28(4), 475-488.

Gunawan, L., Haryono, S., Andreani, F. (2021), Social media influencer, brand awareness, and purchase decision among generation Z in Surabaya. Jurnal Manajemen Dan Kewirausahaan, 23(1), 18-26.

Hair, J., Howard, M., Nitzl, C. (2020), Assessing measurement model quality in PLS-SEM using confirmatory composite analysis. Journal of Business Research, 109, 101-110.

Hair, J.F., Hult, G.T.M., Ringle, C.M., Sarstedt, M. (2022), A Primer on Partial Least Squares Structural Equation Modeling (PLS-SEM). 3rd ed. Thousand Oaks, CA: Sage.

Hashim, N.I., Mohd Fauzi, N., Mohamad Zan, U.M.S. (2025), The moderating role of influencer marketing in the relationship between customer perception and halal food products purchase behaviour. Asian Journal of Social and Management Research Journal, 22(1), 65-84.

Hermanus, T.W. (2022), A Strategic Communication Framework to Manage the Effect of User-generated Content on Consumer-based Brand Equity of Major Retailers in the Cape Metropole [Doctoral Dissertation, Cape Peninsula University of Technology].

Ilyas, G.B., Rahmi, S., Tamsah, H., Munir, A.R., Putra, A.H.P.K. (2020), Reflective model of brand awareness on repurchase intention and customer satisfaction. Journal of Asian Finance, Economics and Business, 7(9), 427-438.

Izzudin, M.S., Novandari, W. (2018), The Effect of perceived quality, brand image on customer satisfaction and brand awareness toward repurchase intention. Journal of Research in Management, 1(3), 32-43.

Kataria, S., Saini, V. (2020), The mediating impact of customer satisfaction in relation of brand equity and brand loyalty: An empirical synthesis and re-examination. South Asian Journal of Business Studies, 9(1), 62-87.

Keller, K.L. (1993), Conceptualizing, measuring, and managing customer-based brand equity. Journal of Marketing, 57(1), 1-22.

Khurram, M., Qadeer, F., Sheeraz, M. (2018), The role of brand recall, brand recognition and price consciousness in understanding actual purchase. Journal of Research in Social Sciences, 6(2), 219-241.

Kim, H., Park, M. (2023), Virtual influencers attractiveness effect on purchase intention: A moderated mediation model of the product–endorser fit with the brand. Computers in Human Behavior, 143, 107-137.

Kline, R.B. (2023), Principles and Practice of Structural Equation Modeling. New York City: Guilford Publications.

Koay, K.Y., Ong, D.L.T., Khoo, K.L., Yeoh, H.J. (2020), Perceived social media marketing activities and consumer-based brand equity: Testing a moderated mediation model. Asia Pacific Journal of Marketing and Logistics, 33(1), 53-72.

Kotler, P., Kevin, L.P., Chernev, A. (2022), Marking Management: Analysis, Planning and Control. 16th ed. United Kingdom: Pearson.

Kristiawati, I., Kusmaningtyas, A. (2020), The effect of perceived quality on brand satisfaction and repurchase intention on millennial generation of the users of XL Surabaya pre-paid cellular card in the revolution industry era 4.0 with timeless brand experience as a mediation. Southeast Asia Journal of Contemporary Business, Economics and Law 23(1), 163-171.

Kusumawardani, K., Purniasari, P. (2021), The effect of online consumer interaction and shopping motivation on purchase intention. Firm Journal of Management Studies, 6(2), 183-202.

Lee, M., Cai, Y., DeFranco, A., Lee, J. (2020), Exploring influential factors affecting guest satisfaction: Big data and business analytics in consumer-generated reviews. Journal of Hospitality and Tourism Technology, 11(1), 137-153.

Leung, L.S.K. (2020), The impact of diurnal preferences on customer satisfaction, word of mouth and repurchasing: A study in Indian college online shoppers. Asia-Pacific Journal of Management Research and Innovation, 16(1), 21-30.

Maharani, N.A. (2023), Relationship between Package Redesign and Purchase Intention on Benefit Brow Product [Doctoral Dissertation, Universitas Islam Indonesia].

Malik, A.A., Muthohar, M. (2023), The effect of service quality, brand image, and customer satisfaction on customer loyalty in go food services. Journal Economic Resource, 6(1), 221-229.

Mawaddah, D.A., Suhud, U., Monoarfa, T.A. (2024), Green beauty loyalty: Investigating the role of perceived value, product quality, and customer satisfaction in environmentally friendly cosmetic products. International Journal of Education, Social Studies, And Management, 4(2), 473-493.

Moeliono, N., Fakhri, M., Sari, D., Kurnia, B., Anindita, D.A. (2020),

Green brand awareness factors on the body shop product. Proceedings of the International Conference on Industrial Engineering and Operations Management, 59, 932-938.

Moksin, H.B., Khalil, M.I.B., Zainal, S.B.M., Him, L.C., Den Hau, Y., Musa, M.B. (2023), Factors that influence customer satisfaction among compact SUVs car owners: A case study on an automotive company in Malaysia. Asian Journal of Social Science Research, 5(1), 29-42.

Munaier, C., Mazzon, J., Crescitelli, E., Barreto, I. (2021), Advertising with a service's maximum results: The impact of self-image and envy on the purchase intention and perceived value. Proceedings of the European Marketing Academy, 50, 1-10.

Nagpal, S., Gupta, G. (2023), Impact of pandemic communication on brand-specific outcomes: Testing the moderating role of brand attitude and product category. Journal of Creative Communications, 18(3), 257-273.

Nguyễn, X.N. (2019), Service Quality, Customer Perceived Value and Repurchase Intention in B2B Professional Service Context: The Case of General Insurance Sector in Vietnam [Doctoral Dissertation, Vietnam National University – Ho Chi Minh City International University].

Nisa, M., Leszczuk, M., Juszka, D. (2024), Unveiling the Art of Video Enhancement: A Comprehensive Examination of Content Selection and Sequencing for Optimal Quality in Conventional and Ar-Vr. [SSRN Journal].

Padval, B., Maurya, A.M. (2021), An analytical study of influencing purchase intention of customers towards purchasing of smart phones brands in Mumbai city. NLDIMSR Innovision Journal of Management Research, 5(2), 26-41.

Permana, A.W. (2021), The influence of social media, brand awareness, brand image, brand experience through satisfaction and trust on purchase decisions during the COVID-19 pandemic. American International Journal of Business Management, 4(1), 7-15.

Pham, H.C. (2020), Factors determining brand equity for retail stores: A market segmentation approach. The Journal of Asian Finance, Economics and Business, 7(10), 843-854.

Putri, K.A.M.A., Yasa, N.N.K. (2022), The role of customer satisfaction as mediating variable on the effect of brand image towards coffee shop customer's repurchase intention. European Journal of Business and Management Research, 7(2), 149-154.

Raffaelli, C., Bocchi, E., Estes, Z., Adelman, J.S. (2025), Brand: Brand recognition and attitude norms database. Behavior Research Methods, 57(1), 1-26.

Rahman, M.S., Hossain, M.A., Hoque, M.T., Rushan, M.R.I., Rahman, M.I. (2020), Millennials' purchasing behaviour toward fashion clothing brands: Influence of brand awareness and brand schematicity. Journal of Fashion Marketing Management, 25(1), 153-183.

Rahul, N.A. (2024), Project management in higher education marketing: A study on leveraging mentorship programs to enhance brand visibility and student recruitment at United African University of Tanzania. American Journal of Industrial and Business Management, 14, 737-758.

Rahuman, A.A., Akram, A.M., Siraji, M. (2022), Service quality and customer satisfaction: Evidence from state commercial banks in Ampara district. Daengku: Journal of Humanities and Social Sciences Innovation, 2(1), 9-18.

Razak, M., Hidayat, M., Launtu, A., Kusuma Putra, A.H.P.A., Bahasoan, S. (2020), Antecedents and consequence of brand management: Empirical study of Apple's brand product. Journal of Asia Business Studies, 14(3), 307-322.

Rita, B. (2019), Measurement of customer satisfaction with service quality: Study of fashion chain stores in Lithuania. International Journal of Management, Accounting and Economics, 6(2), 113-128.

Rodrigues, A.F.A. (2022), Developing a Communication Plan for Leonor Silva Jewellery in Order to Create Brand Awareness in Portugal [Doctoral Dissertation, Universidade Católica Portuguesa].

Rogojina, A., Kim, E.L., Miles-Novelo, A., Gentile, D.A. (2023), Video Games and Violent Content. Oxford, UK: Oxford University Press.

Rosihan, M., Aris, A. (2022), The influence of cultural values towards creativity enhancement: The case of Malaysian fashion designers. International Journal of Art and Design, 6(1), 94-108.

Samsa, C. (2023), The mediating role of firm prestige in the relationship between perceived quality and behaviour intention in customer cafeteria experiences. Marketing and Management of Innovations, 14(2), 87-100.

Seftylia, C., Cholil, W. (2022), Application of the customers satisfaction index (CSI) and importance performance analysis (IPA) methods to measure reader satisfaction with the quality of website services indodaily.co. Budapest International Research and Critics Institute-Journal, 5(3), 24525-24536.

Shahzad, K., Ahmad, I., Gul, A. (2019), Mediating role of customer satisfaction between corporate social responsibility and customer-based equity. Business and Economic Review, 11(9), 123-144.

Shaikh, A., Richard, G., Tudor, A., Zheng, C., Karjaluoto, H. (2018), Social network brand visibility (SNBV): Conceptualization and empirical evidence. Journal of Emerging Issue of Global Marketing, 1(6), 149-178.

Shao, W., Grace, D., Ross, M. (2019), Investigating brand visibility in luxury consumption. Journal of Retailing and Consumer Services, 49, 357-370.

Shen, Z., De la Garza, A. (2019), Developing a digital artifact for the sustainable presentation of marketing research results. Sustainability, 11(23), 1-22.

Shukri, M.S., Yajid, M.S.A., Khatibi, A. (2020), Mediating role of customer satisfaction on the relationship of perceived values and services quality with customer loyalty in the telecommunication service providers in Malaysia. Systematic Reviews in Pharmacy, 11(1), 1021-1032.

Silva, M.J.D.B., Farias, S.A.D., Grigg, M.K., Barbosa, M.D.L.D.A. (2020), Online engagement and the role of digital influencers in product endorsement on Instagram. Journal of Relationship Marketing, 19(2), 133-163.

Singh, N., Pardesi, A.A. (2019), Comparative study of brand building practices of Indian commercial banks using CBBE model. Journal of Critical Reviews, 6(6), 2744-2754.

Smith, T.A. (2020), The role of customer personality in satisfaction, attitude-to-brand, and loyalty in mobile services. Spanish Journal of Marketing-ESIC, 24(2), 155-175.

Stengel, J., Lamberton, C., Favaro, K. (2023), How brand building and performance marketing can work together. Harvard Business Review, 101(5-6), 124-135.

Sudirjo, F., Mu'min, H., Marjuki, M., Triyantoro, A. (2024), Analysis of the effect of sustainable marketing strategy, brand image, and customer satisfaction on customer loyalty in the manufacturing industry in Karawang. West Science Interdisciplinary Studies, 2(2), 448-457.

Suetrong, P. (2023), Love is better than liking comparison of the effects of brand love and brand likeability on consumer repurchase intention: A case study of fashion and barber/hairdresser. Rajabhat Chiang Mai Research Journal, 24(1), 21-36.

Supiyandi, A., Hastjarjo, S., Slamet, Y. (2022), Influence of brand awareness, brand association, perceived quality, and brand loyalty of Shopee on consumers' purchasing decisions. CommIT (Communication and Information Technology) Journal, 16(1), 9-18.

Swaminathan, V., Sorescu, A., Steenkamp, J.B.E., O'Guinn, T.C.G.,

Schmitt, B. (2020), Branding in a hyperconnected world: Refocusing theories and rethinking boundaries. Journal of Marketing, 84(2), 24-46.

Swasty, W., Mustafa, M. (2022), Colour on food packaging as brand visibility and value creation: A systematic review. GATR-Global Journal of Business Social Sciences Review, 10(4), 267-284.

Taqi, I., Muhammad, G. (2020), Brand loyalty and the mediating roles of brand image and customer satisfaction. Journal of Management, business, and Economics, 15(1), 101-119.

Tseng, T.H., Wang, Y.M., Lin, H.H., Lin, S.J., Wang, Y.S., Tsai, T.H. (2022), Relationships between locus of control, theory of planned behaviour, and cyber entrepreneurial intention: The moderating role of cyber entrepreneurship education. The International Journal of Management Education, 20(3), 100682.

Uribe, R., Buzeta, C., Manzur, E., Celis, M. (2022), Celebrity endorsement using different types of new media and advertising formats. Academia Revista Latinoamericana de Administración, 35(3), 281-302.

Uzir, M.U.H., Al Halbusi, H., Thurasamy, R., Hock, R.L.T., Aljaberi, M.A., Hasan, N., Hamid, M. (2021), The effects of service quality, perceived value and trust in home delivery service personnel on customer satisfaction: Evidence from a developing country. Journal of Retailing and Consumer Services, 63, 102721.

Veybitha, Y., Andriyani, I., Pamuji, M. (2024), The influence of product quality and promotion on customer satisfaction Keisha collection Pangkalan Balai clothing store. International Journal of Management and Business Economics, 3(1), 51-59.

Viloma, R.M., Junge, K.N. (2023), Genuine or Misleading? An Exploration of Gen Z Consumer Perceptions of Inauthentic Brand Heritage in Fashion Branding. [Master's Thesis, Lund University School of Economics].

Wahyadyatmika, I.B.P., Mahyuni, L.P. (2025), Brand love mediates fashion innovativeness, perceived quality, value for money, and word of mouth effects. Indonesian Interdisciplinary. Journal of Sharia Economics, 8(1), 2071-2093.

Wang, Y., Liu, Z., Jiang, J. (2023), The effect of positive emoticons on consumers' purchase intention. Psychology Science, 46, 435-442.

Wantara, P., Irawati, S.A. (2021), Relationship and impact of service quality, destination image, on customer satisfaction and revisit intention to Syariah destination in Madura, Indonesia. European Journal of Business and Management Research, 6(6), 209-215.

Wong, H.S., Wong, R.K., Leung, S. (2019), Enhancing sustainability in banking industry: Factors affecting customer loyalty. Academy of Accounting and Financial Studies Journal, 23(3), 1-12.

Xiao, A., Yang, S., Iqbal, Q. (2019), Factors affecting purchase intentions in generation Y: An empirical evidence from fast food industry in Malaysia. Administrative Science, 9(4), 1-16.

Xu, S. (2025), Brand sponsorship on follower engagement: A difference-in-difference analysis of social media influencers on Douyin. In: 2024 6th International Conference on Economic Management and Cultural Industry (ICEMCI 2024). Netherlands: Atlantis Press, pp. 489-495.

Yang, S.J., Lee, Y. (2019), Mid- to low-end fashion brand personality affects consumers' perceived quality, commitment, and loyalty. Social Behaviour and Personality: An International Journal, 47(7), 1-14.

Yasri, Y., Susanto, P., Hoque, M.E., Gusti, M.A. (2020), Price perception and price appearance on repurchase intention of gen Y: Do brand experience and brand preference mediate? Heliyon, 6(11), 2-8.

Zhang, Y., Huang, S. (2024), The influence of visual marketing on consumers' purchase intention of fast fashion brands in China–An exploration based on fsQCA method. Frontiers in Psychology, 15, 1-15.

Zwakala, K.M. (2020), Brand Identity-Image Congruence Framework for Business-to-Business Banks within South Africa [Doctoral dissertation, Cape Peninsula University of Technology].