International Review of Management and Marketing

ISSN: 2146-4405

available at http: www.econjournals.com

International Review of Management and Marketing, 2026, 16(3), 19-28.

Effects of AI Chatbots on Customer Satisfaction: Understanding the Mediating Role of Customer Satisfaction on Customer Loyalty

Imran Ali[1], Mohammad Naushad[2]*, Mohammad Rishad Faridi[3], Abdullah Saad Rashed[3]

[1]Noida Institute of Engineering and Technology, Greater Noida, Uttar Pradesh, India, [2]Department of Management, College of Business Administration, Prince Sattam Bin Abdulaziz University, AlKharj-11942, Saudi Arabia, [3]Department of Marketing, College of Business Administration, Prince Sattam Bin Abdulaziz University, AlKharj-11942, Saudi Arabia. *Email: n.mohammad@psau.edu.sa

Received: 20 August 2025 **Accepted:** 01 February 2026 **DOI:** https://doi.org/10.32479/irmm.21405

ABSTRACT

Advanced chatbots are powered by artificial intelligence, capable of solving complex queries, communicating with customers, and providing instant services through messaging. Advanced chatbots are not limited to customer support services, consumer research and recommendations. AI chatbots are used across industries like banking, financial services, hotel, tourism, media and entertainment and education. This is the need of the hour to assess the impact of AI chatbots on customer satisfaction and customer loyalty. The primary objective of this study is to determine the impact of AI chatbots on customer satisfaction and loyalty. This topic is considered for the research since artificial intelligence is influencing each business and individual. The current study considered one dependent variable (customer loyalty), and one mediating variable (customer satisfaction) and four independent variables (usability, responsiveness, trust and perceived risk). The sampling technique used for data collection was convenience sampling and the sample size was 413. Statistical techniques like exploratory factor analysis (EFA), structural equation modeling (SEM), and mediation analysis were used for data analysis. All construct of this study meets the threshold with average variance extracted exceeding 0.50 and composite reliability exceeding 0.70. All indices of the model fit were found statistically significant on several parameters. Among all variables, only perceived risk affects the customer satisfaction.

Keywords: Chatbots, Artificial Intelligence, Satisfaction, Loyalty, Trust, Risk
JEL Classifications: M31, L86, C38, C83, O33

1. INTRODUCTION

AI chatbots are quite popular across industries for various purposes. Chatbots not only provide services accurately but also at a very low cost. Demand for manpower is lower down which is the main component of operating cost for service organizations. AI chatbots are software application that uses NLP (natural language processing) for seamless communication (Pillai and Sivathanu, 2020). Artificial intelligence (AI) chatbots automate the process of communicating, solving complex queries, and offering instant solutions (Sheehan et al., 2020). Siri, Alexa and Google Home are famous voice-based digital assistants that assist people in making decisions. Furthermore, business organizations are integrating text-based systems into messaging apps to make the conversation more effective and seamless. It is predicted that all customer support operations will employ chatbot technology. Customer support processes will be technology-driven. An individual will talk more with chatbots compared to their friends. Chatbots are based on self-service technology (SST), which requires no human intervention (Jang et al., 2021). All business process outsourcing (BPO) units will also integrate self-service technology or AI chatbots into the customer support process to automate the services and reduce costs. This will also improve the quality of services provided by the BPOs. BPOs could reduce the manpower cost substantially.

This Journal is licensed under a Creative Commons Attribution 4.0 International License

Customers' awareness and familiarity with emerging technology are highest at this juncture, and it is projected to increase in the future too, since internet penetration is increasing. Self-serving technologies are very common nowadays across industries. Individuals are also quite friendly using emerging technologies like AI chatbots. E-service agents or AI chatbots are inevitable for business organizations to achieve a competitive advantage and economies of scale. Modern businesses are shifting from traditional human-based systems to technology-based systems to communicate with customers instantly, providing solutions to complex customers' queries. Nowadays, chatbots are used in various functions of business organizations, particularly marketing and sales, irrespective of the size and scale of business, whether it is a startup or a multinational corporation (Agag and El-Masry, 2017; Kwangsawad and Jattamart, 2022). Distribution, customer support, sales, and marketing have benefited from the AI chatbots, which made all process smooth and automated (Agag, 2019; Wang and Shao, 2022). Advanced technologies like machine learning made the conversation and engagement with customers hassle-free (Abdelmoety et al., 2022; Aboul-Dahab et al., 2021; Jenneboer et al., 2022). Therefore, this paper aimed to examine the impact of AI chatbots on customers' satisfaction and loyalty. The following objectives have guided this study:

1. To examine the level of customers' satisfaction and loyalty across the demographic variables
2. To determine the factors affecting customers' satisfaction and loyalty
3. To assess the function of customer satisfaction as a mediating variable.

This study first conducts a literature review to ascertain the research gap and develop a research model. The next section describes the research methods used. The following sections detail the analytical results obtained. Finally, the conclusion, managerial implications, and future scope of the study are presented.

2. LITERATURE REVIEW

Customer engagement is vital for business organizations to retain their customers, to increase revenue and profitability. Technology plays an important role in engaging customers and providing quality services. AI chatbots have emerged as a preferred choice among companies across industries such as media and entertainment, real estate, automobile, banking, pharmaceutical and financial services. However, chatbots lack humanization, sentiment and empathy. It is inevitable to make chatbots customer-friendly, smart and responsive to make customers satisfied and loyal (Hentzen et al., 2022; Suhel et al., 2020). Artificial intelligence chatbots perform like human beings, in a few cases better than human beings. AI chatbots are efficient, cost-effective and save time. AI chatbots are not like traditional management information systems. Therefore, the criteria to evaluate AI chatbots' effectiveness must be different. AI chatbots' effectiveness can be measured on the basis of usability, responsiveness, perceived risk, trust, customer satisfaction and customer loyalty. These parameters are discussed in detail in the following paragraphs.

2.1. Usability

Usability is defined as the ease of using a chatbot or other technology to complete a task effectively (Chen et al., 2021). Customer's experience of using chatbot can be measured on various parameters such as user's satisfaction, error rate, ease of use and efficiency (Chen et al., 2015; Ren et al., 2022). Customer satisfaction leads to delighted customers, positive word of mouth and customer loyalty (Chung et al., 2020). Chatbot ensures personalization and improves customer satisfaction (Kraus et al., 2019). AI chatbots improve productivity, customer satisfaction by providing quality services and personalization (Prentice et al., 2019).

2.2. Responsiveness

Responsiveness refers to how quickly customers are provided the required services. Customer satisfaction improves if assistance is provided quickly or their grievances are addressed on time (Chen et al., 2021). Furthermore, quick response ensures 24/7 service assistance and ease of access (Chung et al., 2020). Customers are also interested in using the AI chatbot as they consider it an innovation, which will improve productivity (Chen et al., 2021). Customer satisfaction increases due to the AI chatbot because AI chatbot ensures quick service and 27/7 service availability. However, issues related to AI chatbots like late reply, inaccurate response, limited availability and no reply negatively impacts the customer's satisfaction and customer's loyalty (Mogaji et al., 2021).

2.3. Trust

Trust in using chatbot significantly impact the customer's satisfaction (AlHogail, 2018; Viardot, 2017; Weck and Afanassieva, 2023; Ennajeh and Najar, 2024; Huang et al., 2024b). Trust is likely to increase if customers are assured that their information will not be misused. Customer want personal data protection and privacy protection (Slane and Pedersen, 2024; Krishna et al., 2023). Numerous research studies have underlined the importance of trust in the online business environment. Trust encourages the customer to use new technology such as artificial intelligence, agentic artificial intelligence and AI chatbot (Saoula et al., 2023). Trust is an important factor both in human-to-human and human-to-computer interactions. Risk of misuse of personal information demotivates customers to share their personal information and use chatbots (Valenzuela et al., 2024; Huang et al., 2024a, b). Customers do not prefer to accept new technology due to a lack of trust (Ghanibardi, 2024). Research studies suggest that trust increases customer satisfaction and customer loyalty (Wu and Ku, 2024; Huang et al., 2024a).

2.4. Perceived Risk

Perceived risk refers to customers' hesitation to use AI chatbot due to misuse of personal information, revelation of material information and other related risks (Wang and Lin, 2017). Customers are concerned about using AI chatbot because their personal information is collected while using an AI chatbot, which is confidential and may be misused by other people (Ho, 2006). Numerous research studies have proved that customers perceived high risk in doing digital payments, online banking and using smartwatches due to mainly misuse of their personal information (Gao and Waechter, 2017, Farah et al., 2018, Dehghani, 2018). Business organizations using AI chatbot for marketing communication, corporate communication and branding with the

same challenges of disclosure of personal information. Customers are often irritated, disturb or confused by frequent messaging and risk of disclosure of personal information (Eeuwen, 2017). While purchasing products, accessing services, getting their doubts clear and chatting with company representative might contain the risk of sharing personal information with unauthorized parties. Previous research studies have revealed the negative impact of various risks in using AI chatbot on customer's satisfaction. Many scholars have explored that privacy risk and security risk have negative impact on customer's satisfaction (Shankar et al; 2003).

2.5. Customer Loyalty

Customer loyalty refers to when a customer is loyal to a particular brand or business organization. They do not want to switch to the competitors. The propensity to continuously buy and consume products is very high among loyal customers. These loyal customers spread a positive word of mouth and recommend the products to other people. Organizations do not need to spend money on customer acquisition, branding and marketing communication. Organization's existing customers are loyal and will keep on buying from the same organization which will result in higher revenue and profit (Khan et al., 2021). Business organizations are using AI chatbots to engage their customers, messaging customers, handling their queries and providing quality services. Chatbot contribute significantly to making their customers loyal by providing quick responses to customers' queries and instant services. However, ineffectiveness of AI due to a variety of complaints, lack of personalization, and unpleasant interaction may negatively impact customer satisfaction and customer loyalty. Therefore, business organizations must design the chatbot in such a way that they are capable of understanding various languages, able to provide a variety of services and provide instant response to the customer's queries (Sidaoui et al., 2020). These qualities of AI chatbots may improve customer loyalty, repeat purchases, and customer retention. Over time, AI chatbots are expected to be more advanced in the future, which will enable AI chatbots to provide personalized services, capable to handle complex business queries (Nicolescu and Tudorache, 2022).

2.6. Customer Satisfaction

Business organizations are highly concerned with customer satisfaction because the success of an organization solely depends on customer satisfaction. Revenue, cash inflow, and customer loyalty all depend on customer satisfaction. Organizations take all necessary actions to ensure the satisfaction of their customers. Satisfied customers do not switch to competitors, spread positive word of mouth, and repeat purchases. In order to make their customers satisfied, organizations need to identify the customers needs, focus on fulfilling them in an affordable way at the right time (Hult et al., 2022). Furthermore, companies are using advanced technologies like artificial intelligence, machine learning, deep learning, blockchain technology and AI chatbots to elevate the level of customer satisfaction. Technology plays a significant role in providing quality services, instantly focusing on the individual needs. AI chatbots that are responding quickly, addressing customers' needs with empathy, and solving complex queries are likely to impact customer satisfaction positively. However, the use of AI chatbots has to be done carefully because ineffective chatbots will negatively impact customer satisfaction (Lubbe and Ngoma, 2021). Business organizations need to monitor the chatbot's effectiveness regularly on certain parameters like personalization, ability to handle complex queries, instant responses, and accuracy of responses. Inaccurate or late responses may negatively impact customer satisfaction. Conversely, chatbots that are handling complex customer queries effectively, providing instant solutions to the customer's problem, will increase customer satisfaction (Haugeland et al., 2022). AI chatbots will be more advanced and empowered to handle customers' queries empathetically. These technological advancements will impact the customer's satisfaction positively (Del Prete, 2021).

2.7. Customer Satisfaction and Customer Loyalty

Customer loyalty depends on customer satisfaction. Only a satisfied customer can be a loyal customer and will demonstrate a positive attitude towards a company or brand. Satisfied customers are likely to purchase continuously and recommend the company's product to other customers (Salam et al., 2022). Profitability and future business prospects also depend on customer satisfaction. On the other hand, few research studies have explored that loyalty does not only depend on customer satisfaction. Other factors may also impact customer satisfaction. There may be a few highly satisfied customers, whereas others may be less satisfied (Hult et al., 2022).

2.8. Mediating Role of Customer Satisfaction

Due to high adoption of artificial intelligence and other emerging technologies, business organizations are using AI chatbots intensively for customer interaction, messaging, solving problems, and providing instant support. Customer satisfaction is dependent on the chatbot quality. If chatbots are user-friendly, smart, available 24/7 for customer service and capable of solving complex queries will affect the customer's satisfaction positively. Consequently, positive customer sentiments and customer satisfaction will boost customer loyalty (Hsu and Lin, 2023). Satisfied customers are emotionally attached to a company or brand and exhibit trust and advocate for the brand to potential customers, which elevates customer loyalty. Satisfactory experience with the chatbots will also increase the loyalty among customers. On the other hand, negative customer experience with chatbots lowers both customer satisfaction as well as customer loyalty (Tsai et al., 2021). Numerous research studies have argued that positive experience with chatbots impacts the customer's loyalty through customer satisfaction.

2.9. Research Gap

Despite extensive research work on artificial intelligence and other emerging technologies, a significant gap exists in the area of AI chatbots and their impact on customer satisfaction. Most of the published research work is concentrated on European countries or other countries. None of the published research measured the impact of AI chatbots on customer satisfaction and customer loyalty. Therefore, there is a need for research work that intends to measure the impact of AI chatbots on customer satisfaction and customer loyalty, especially when emerging technologies are impacting businesses and human life extensively. This study integrates several factors like usability, responsiveness, trust, perceived risk, customer satisfaction, and customer loyalty.

Usability of AI chatbots is considered an important factor affecting customer satisfaction. In addition, other factors like responsiveness, trust, and perceived risk are also the main determinants of customers' satisfaction. The proposed research model is exhibited in Figure 1.

2.10. Aims and Hypotheses

This study underlines the importance of AI chatbots in marketing, branding and interacting with customers. Organizations are widely adopting AI chatbots to engage with customers, to provide quick and instant services in order to make their customers happy and loyal. The study intends to examine the effects of AI chatbots on customer satisfaction and customer loyalty. The research work examines the impact of AI chatbots' usability, responsiveness, trust and perceived risk on customer satisfaction and customer loyalty. The main objective of this research work is to measure the impact of AI chatbots on customer satisfaction and loyalty. Based on the above discussion, it is hypothesized that:

H_1: There is a positive and significant impact of usability on customer satisfaction.

H_2: There is a positive and significant impact of responsiveness on customer satisfaction.

H_3: There is a positive and significant impact of trust on customer satisfaction.

H_4: There is a positive and significant impact of perceived risk on customer satisfaction.

H_5: There is a positive and significant impact of customer satisfaction on customer loyalty.

H_6: Customer satisfaction has a mediating impact on the relationship between usability and customer loyalty.

H_7: Customer satisfaction has a mediating impact on the relationship between responsiveness and customer loyalty.

H_8: Customer satisfaction has a mediating impact on the relationship between trust and customer loyalty.

H_9: Customer satisfaction has a mediating impact on the relationship between perceived risk and customer loyalty.

3. RESEARCH METHODS

Business organizations are using chatbots for handling customers' problems and providing quality services. Chatbot is a cost-effective way to handle customers' grievances and maintain the quality of services. The main objective of this research work is to examine the impact of chatbots on customers' loyalty in the presence of customer satisfaction as a mediating variable. Delhi and National Capital Region (NCR) are the most appropriate locations for this study because people of Delhi and national capital region (NCR) are aware of artificial intelligence and its advantages and disadvantages. Since many of them are using chatbots for their queries and they have experienced the effectiveness of chatbots. Their responses will be based on their experience. Data was collected from April 2025 to July 2025.

Figure 1: Proposed research model

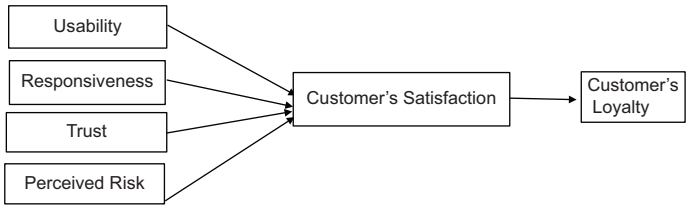

A well-structured questionnaire was used for data collection. The questionnaire was based on chosen factors for the study. The questionnaire consists of two sections. The first section intends to collects data related to respondents' demographic characteristics such as gender, marital status, age, income and education. Furthermore, the second section concentrates on collecting data based on main constructs such as responsiveness, privacy, perceived trust, usability, customer satisfaction and customer loyalty. There are a total of six constructs. Four are independent variables, one is a mediating and one is a dependent variable. The questionnaire is composed of 21 items that examine the effects of chatbots on customers satisfaction and customer loyalty.

In order to collect data, the questionnaire was distributed among the potential respondents via email, whatsapp and other social media platforms. Approximately, 600 questionnaires were distributed among potential respondents, out of which 500 were received. Many of them either were incomplete or filled inappropriately. Total 413 questionnaires were found appropriate for the study and finally selected. Therefore, the sample size for the study is 413. Convenience sampling technique were used in data collection. Various statistical techniques were used for data analysis including correlation, exploratory factor analysis and confirmatory factor analysis. The data was analyzed using IBM SPSS 26 and IBM AMOS 26. Furthermore, confirmatory factor analysis (CFA) and structural equation modeling was used due to its versatility and incremental usage. Structural equation modeling (SEM) is considered as a subset of factor analysis and multiple regressions. Structural equation modeling (SEM) is the most appropriate technique for examining theories involving multiple equations, their relationships and the interdependence of the study variables. In this study, we aimed to examine the impact of chatbots on customers' satisfaction and customer loyalty.

4. RESULTS OF DATA ANALYSIS

Mainly IBM SPSS 26 and IBM AMOS 26 were used for data analysis. Some of the common statistical techniques like correlation analysis, exploratory factor analysis and structural equation modeling were employed for detailed data analysis. In order to validate the data analysis result, structural equation modeling was used. Structural equation modeling (SEM) is conducted in two parts. The first part of Structural equation modeling uses confirmatory factor analysis to check whether data fit into the model. Confirmatory factor analysis (CFA) is used to validate the measurement model. On the other hand, the second step is to validate the structural model using structural equation modeling. The data analysis process starts with a demographic analysis of the respondents with the help of SPSS. Table 1 exhibits the respondents' profile based on demographic data.

Table 1 exhibits the demographic profile of respondents. This study has 53.27% male and 46.73% female. 45.03% of the respondents are in the age group of 18-30 years, 30.02% are in the age group

of 31-40 years, 12.10% in the age group of 41-50 years, 10.42% in the age group of 51-60 years, 2.43% respondents are of more than 60 years. On the other hand, 45.77% of the respondents are single, whereas 54.23% of the respondents are married. As far as annual income is concerned, 44.07% earned <3 lakh, 37.05% of total respondents earn 3-5 lakh, 13.80% earn 5-20 lakh and 5.08% of respondents earn more than 20 lakh. Furthermore, 27.36% of respondents are undergraduate, 54.98% of respondents are graduate, 14.76% are post graduate, whereas 2.90% of respondents have other educational qualification.

4.1. Exploratory Factor Analysis

Exploratory factor analysis (EFA) is a statistical technique used for condensing the dataset and uncovering the underlaying variables. It helps in the identification of the most appropriate factors for the study. Exploratory factor analysis (EFA) was employed with principal axis factoring, and Promax rotation with Kaiser Normalization (Eigenvalues 1) was performed. Table 2 exhibits the obtained values of KMO and Bartlett's. Kaiser-Meyer-Olkin (KMO) value of <0.6 is considered acceptable, values between 0.7 and 0.8 considered good, and value above 0.9 is considered excellent. However, KMO value <0.5 is generally considered unacceptable. The obtained Kaiser-Meyer-Olkin (KMO) value for this study is 0.728 which is good as per the research standard.

Table 1: Demographic profile

Particular	Frequency	Percentage
Gender		
Male	220	53.27
Female	193	46.73
Total	413	100.0
Age		
18-30	186	45.03
31-40	124	30.02
41-50	50	12.10
51-60	43	10.42
More than 60	10	2.43
Total	413	100.0
Marital status		
Single	189	45.77
Married	224	54.23
Total	413	100.0
Annual income		
More than 3 lakh	182	44.07
3-5 Lakh	153	37.05
5-20 lakh	57	13.80
More than 20 lakh	21	5.08
Total	413	100
Education		
Under graduate	113	27.36
Graduate	227	54.98
Post graduate	61	14.76
Any other	12	2.90
Total	413	100.0

Table 2: KMO and Bartlett's test

Measurements		Values
Kaiser-Meyer-Olkin measure of sampling adequacy		0.728
Bartlett's test of sphericity	Approx. Chi-square	4238.26
	df	210
	Significance	0.000

Therefore, data is considered adequate for the study. Table 2 also exhibits the value of Bartlett's test of Sphericity which is 0.000, is considered as is significant and justify that data is sufficient for the further analysis.

Initially, research questionnaire had 25 items under the six constructs, four independent, one dependent and one mediating variable. On the basis of obtained results from factor analysis, four items were found having poor factor loading. Consequently, 21 items were selected for the further study.

4.2. Reliability and Validity

Data was collected through a structured questionnaire. Questionnaire must be framed in such a way that it is capable to measure what it intends to measure. In order to examine the quality of research questionnaire, reliability and validity test are used. Reliability test specifies the ability of a research questionnaire to produce accurate and consistent results. Furthermore, Cronbach's alpha examines the internal consistency of the research questionnaire and whether it is able to measure what it is aimed to measure. Cronbach's alpha value of >0.6 (Hair et al., 1988) is considered appropriate to assess the scale reliability. The reliability and validity indices and their values are reported in Table 3. It was found in data analysis that all constructs have Cronbach's alpha value >0.6 except perceived risk which have Cronbach's alpha value 0.39. This result proves that questionnaire scale is highly reliable and capable enough to produce the consistent and accurate result. Furthermore, convergent validity was calculated through average variance extracted. The threshold value of average variance extracted is 0.5. Average variance extracted value of >0.5 proves adequate convergent validity (Zikmund and Babin, 2015. The AVE's calculated value of usability (as reported in Table 3) are 0.93, customer's satisfaction 0.88, customer's loyalty 0.86, responsiveness 0.82, trust 0.75 and perceived risk 0.60.

4.3. Discriminant Validity

Discriminant validity is calculated to ensure that each construct of the study must be different from each other so that each construct measures a different dimension. To meet the threshold value of discriminant validity, the square root of the factor of AVE should be greater than the inter-factor correlation (Fornell & Larcker, 1981). Square root of average variance extracted is greater than the inter-factor correlation (Table 4). Thus, it confirmed that discriminant validity exists.

4.4. Model Fit

Confirmatory factor analysis (CFA) was administered using IBM AMOS 26. Confirmatory factor analysis (CFA) is performed to assess the model fitness. Numerous indices are used to validate the measurement model. Some of the indices used in this research are CMIN/df, comparative fit index (CFI), goodness of fit index (GFI), adjusted goodness of fit index (AGFI), parsimonious normal fit (PNFI) and parsimonious normal fit (PNFI) to validate the measurement model. However, there is no fixed number of indices to validate the measurement model. Confirmatory factor analysis (CFA) contained six constructs and twenty-one items. All indices' values are within the set criteria. The Table 5 exhibits

Table 3: Reliability and validity

Constructs	Items code	Loadings (≥0.5)	AVE (≥0.5)	Alpha (≥0.6)	CR (≥0.7)
Usability	UA4	0.94	0.93	0.94	0.96
	UA2	0.94			
	UA3	0.92			
	UA1	0.91			
Customer satisfaction	CS4	0.89	0.88	0.90	0.93
	CS3	0.89			
	CS2	0.89			
	CS1	0.84			
Customer loyalty	CL2	0.87	0.86	0.82	0.89
	CL3	0.86			
	CL1	0.84			
Responsiveness	RS2	0.90	0.82	0.77	0.86
	RS1	0.82			
	RS3	0.74			
Trust	TR2	0.89	0.75	0.62	0.79
	TR1	0.75			
	TR3	0.60			
Perceived risk	PR4	0.73	0.60	0.39	0.70
	PR3	0.65			
	PR2	0.53			
	PR1	0.50			

Table 4: Discriminant validity (Fornell-Larcker criterion)

	RS	PR	TR	UA	CS	CL
RS	**0.67**					
PR	0.12	**0.36**				
TR	0.03	0.04	**0.56**			
UA	0.03	0.04	0.04	**0.86**		
CS	0.02	0.11	0.05	0.01	**0.77**	
CL	0.02	0.05	0.05	0.03	0.02	**0.74**

values of various indices.

4.5. Structural Model

In order to test the all hypotheses, structural equation modelling was employed. Figure 2 shows the structural model adopted for the present study. There are several advantages of using structural equation modelling over regression analysis. The main benefit of using structural equation modelling is that it is very useful when the sample size is very small (Shiau and Chau, 2016; Hair et al., 2019; Khan et al., 2020; Shiau et al., 2019). Structural equation modelling is also very useful to use when study have multiple dependent variable and research model is very complex (Shiau and Chau, 2016; Khan et al., 2019; Shiau et al, 2019). The following table exhibited various values of structural equation modelling. Moreover, the final structural model can be seen in Figure 3.

Table 6 exhibited that there is no significant and positive impact of usability on customer satisfaction ($\beta = 0.02$, $t = 0.29$ and $P \leq 0.78$). Therefore, hypothesis (H_1) is rejected. There is no positive and significant impact of responsiveness on customer satisfaction ($\beta = 0.01$, $t = 0.35$ and $P \leq 0.73$). Thus, hypothesis (H_2) is rejected. There is no positive and significant impact of trust on customer satisfaction ($\beta = 0.02$, $t = 1.04$ and $P \leq 0.30$). Hence, hypothesis (H_3) is rejected. There is a positive and significant impact of perceived risk on customer satisfaction ($\beta = 4.52$, $t = 3.21$ and $P \leq 0.00$). Therefore, hypothesis (H_4) is accepted. On the other hand, there is no positive and significant impact of customer satisfaction on customer loyalty ($\beta = 0.12$, $t = 1.57$ and $P \leq 0.12$). Therefore, hypothesis (H_5) is rejected.

4.6. Mediation Analysis

This research work intends to examine the mediating role of customer satisfaction on the relationship between usability and customer loyalty, responsiveness and customer loyalty, trust and customer loyalty, perceived risk and customer loyalty. The study aimed to examine the mediating role of customer satisfaction on the relationship between customer loyalty and usability, customer loyalty and responsiveness, customer loyalty and trust, customer loyalty and perceived risk. The result of this study revealed insignificant indirect impact of usability on customer loyalty ($b = 0.000$, $P = 0.589$), insignificant indirect impact of responsiveness on customer loyalty ($b = 0.000$, $P = 0.689$), insignificant indirect impact of trust on customer loyalty ($b = 0.001$, $P = 0.283$), insignificant indirect impact of perceived risk on customer loyalty ($b = 0.005$, $P = 0.308$). Thus, customer satisfaction partially mediated the relationship between usability and customer loyalty, responsiveness and customer loyalty, trust and customer loyalty, perceived risk and customer loyalty. The Table 7 presents the mediation analysis summary. Whereas, the final model of the study can be seen in Figure 3.

5. DISCUSSION

The primary objective of the study is to determine the impact of AI chatbots on customer loyalty with customer satisfaction as a mediating variable. The research objectives of the study are summed up as (i) to examine the level of customer satisfaction and loyalty across the demographic variables (ii) to determine the factors affecting customer satisfaction and loyalty (iii) to assess the function of customer satisfaction as a mediating variable. This study is imperative to conduct because AI chatbots are extensively used across industries such as automotive, banking, financial services, health and wellness, real estate, education,

Table 5: Fit indices confirmatory factor analysis

Fit indices	Recommended values	Observed values	Result
CMIN/df	<5	2.049	Acceptable
Comparative fit index	0.8-0.9	0.956	Acceptable
Goodness of fit index	≥0.9	0.928	Acceptable
Adjusted goodness of fit index	≥0.80	0.904	Acceptable
Parsimonious normal fit	>0.5	0.760	Acceptable
Root mean square error of approximation	<0.08	0.050	Acceptable

Figure 2: Model fit

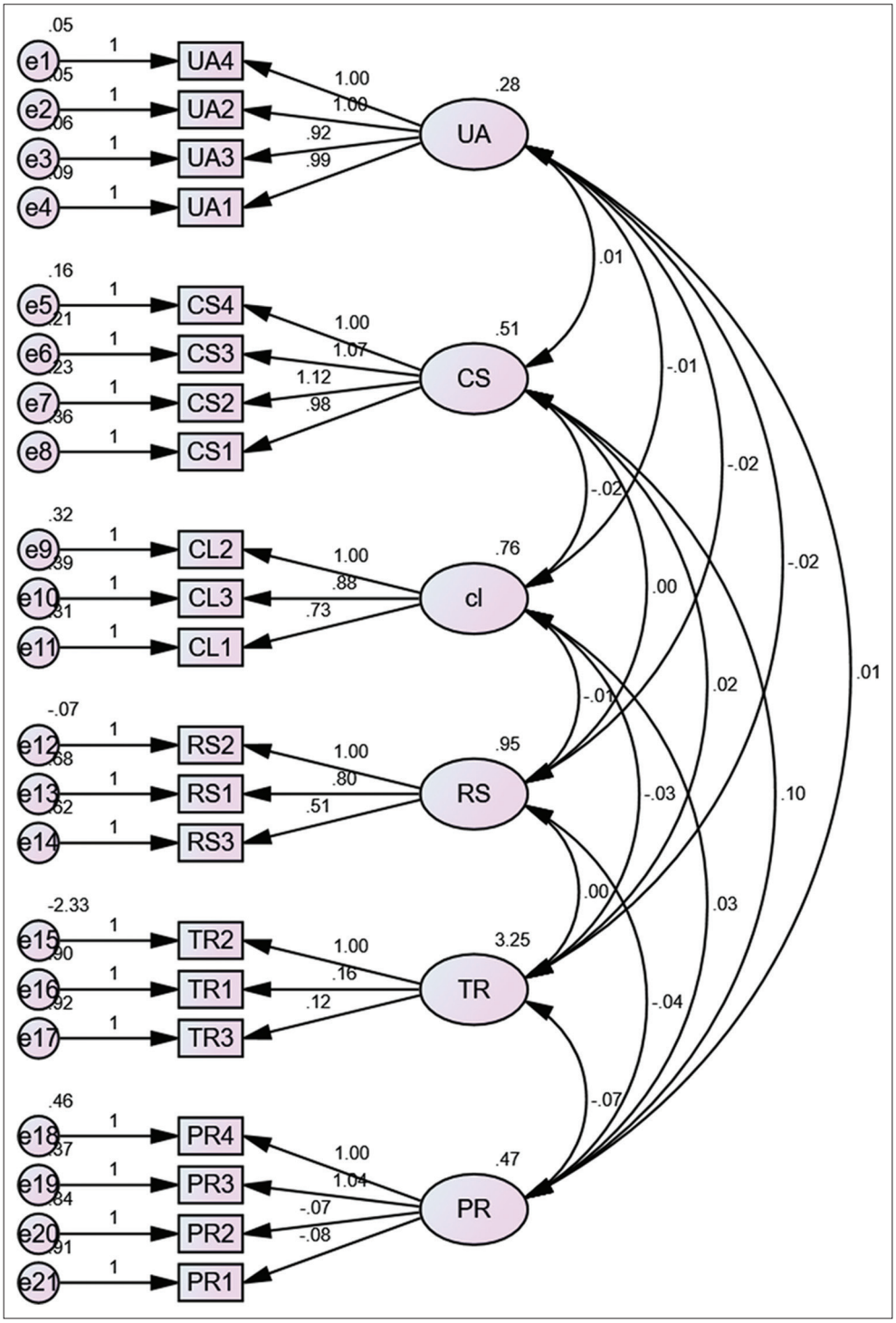

and particularly in services. AI chatbots are expected to benefit businesses by making operations efficient and responsive.

The study has four independent variables named usability, responsiveness, trust, and perceived risk, one mediating variable

Table 6: Hypotheses conclusion

Relationship	Estimate	S.E.	C.R.	P	Status
CS<---UA	0.02	0.07	0.29	0.78	Rejected
CS<---RS	0.01	0.04	0.35	0.73	Rejected
CS<---TR	0.02	0.02	1.04	0.30	Rejected
CS<---PR	4.52	1.41	3.21	0.00	Accepted
CL<---CS	0.12	0.08	1.57	0.12	Rejected

Table 7: Mediation analysis

Relationship	Direct effect	Indirect effect	Confidence interval		P-value	Conclusion
			Lower bound	Upper bound		
UA->CS->CL	−0.042 (0.589)	0.000	−0.009	0.007	0.589	Partial mediation
RS->CS->CL	0.020 (0.684)	0.000	−0.076	0.116	0.689	Partial mediation
TR->CS->CL	−0.059 (0.283)	0.001	−0.010	0.005	0.283	Partial mediation
PR->CS->CL	0.074 (0.308)	0.005	−0.025	0.012	0.308	Partial mediation

Figure 3: Structural model

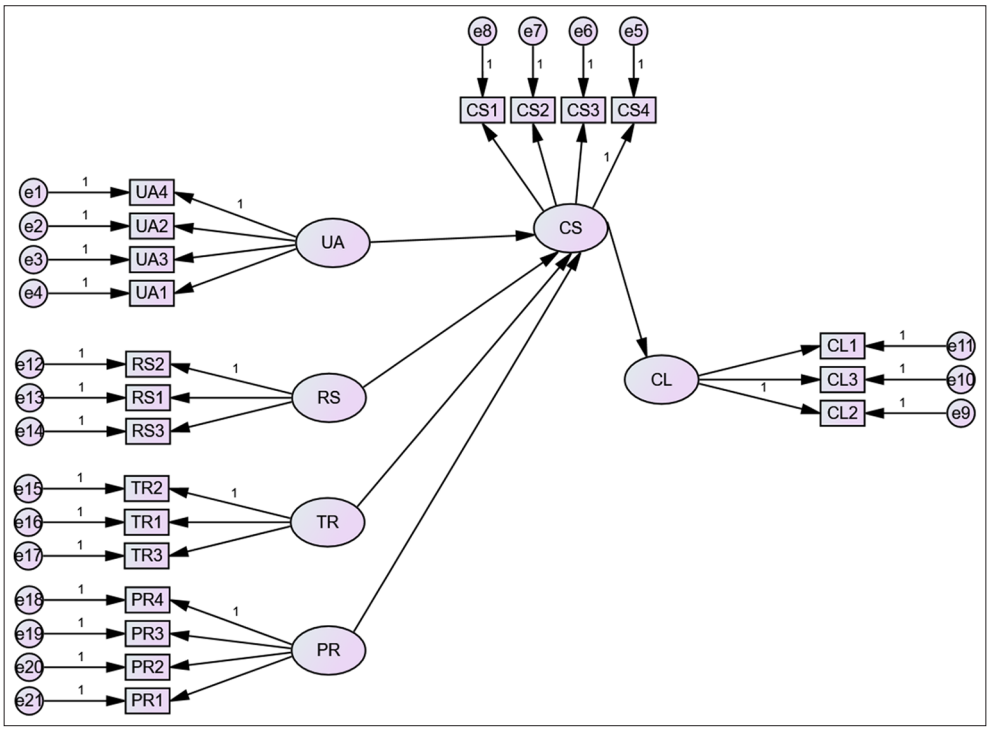

named customer satisfaction, and one dependent variable named customer loyalty. Based on four independent variables, four hypotheses were formulated for testing. The measurement model was found statistically significant on various parameters (CFI-0.956, GFI-0.928, AGFI-0.904, PNFI-0.760, RMSEA-0.050). Furthermore, the result of hypothesis testing shows that the usability of AI chatbots does not impact customer satisfaction ($\beta = 0.02$, $t = 0.29$ and $P \leq 0.78$). The result is not on the same line as the previous studies (Chen et al., 2021, Chen et al., 2015; Ren et al., 2022, Chung et al., 2020). This is because customers are now more mature and usability is not an important determinant since many new features have been added in the chatbots. Next, the responsiveness of chatbots does not impact customer satisfaction ($\beta = 0.01$, $t = 0.35$ and $P \leq 0.73$). This result is similar to the findings of previous research studies (Mogaji et al., 2021) because if the chatbots respond late, not able to solve the queries of the customers. Their satisfaction level will reduce. Additionally, this is also found that trust does not impact customer satisfaction ($\beta = 0.02$, $t = 1.04$ and $P \leq 0.30$). This result is not similar to the findings of previous studies (AlHogail, 2018; Viardot, 2017; Weck and Afanassieva, 2023; Ennajeh and Najar, 2024; Huang et al., 2024b). This study confirmed that perceived risk impacts customer satisfaction ($\beta = 4.52$, $t = 3.21$ and $P \leq 0.00$). This finding is similar to the findings of previous research studies (Gao and Waechter, 2017, Farah et al., 2018, Dehghani, 2018). Finally, customer satisfaction does not impact customer loyalty ($\beta = 0.12$, $t = 1.57$ and $P \leq 0.12$). This finding is similar to the findings of previous studies (Hult et al., 2022) because customer loyalty is not only impacted by customer satisfaction. There are so many other variables that impact customer satisfaction.

6. CONCLUSION

The current study highlights the impact of AI chatbots on customer loyalty, having customers satisfaction as a mediating

variable. The study determines the important factors like usability, responsiveness, trust and perceived risk affecting customer loyalty. The current study has confirmed that perceived risk has significant impact on customer satisfaction. Conversely, usability and responsiveness of AI chatbot do not impact customer satisfaction. The study has also revealed that perceived risk affects satisfaction and loyalty because customers want to be sure that their personal details and personal data will be protected. This study also confirmed that the mediating variable (Customer satisfaction) does not mediate the relationship between customer satisfaction and usability, customer satisfaction and responsiveness, customer satisfaction and trust, and customer satisfaction and perceived risk.

6.1. Managerial Implications

The following managerial implications can be advised based on the findings and discussion (i) Artificial intelligence chatbots are beneficial for customers as well as industries. (ii) Modern businesses could automate the customer support processes with human intervention. (iii) Companies could reduce the operating cost and the quality of services will also improve. (iv) The organization's operating cost will go down substantially. (v) AI chatbots have been beneficial in marketing and sales as these chatbots enable customer engagement, product promotion and customer retention. (vi) customers can connect the corporation 24/7, obtain instant solutions.

6.2. Limitations and Future Research Direction

All research studies have some limitations. Thus, this study also has a few limitations. The geographic limitation of this study is that it was conducted in Delhi and NCR only; therefore results of this study cannot be applied across India. This study reflects the attitude and behavior of respondents who are from Delhi and NCR only. Their views and opinions cannot be generalized and do not represent all citizens of India. AI chatbots are vital for business organizations. As a result, this is also imperative to measure the impact of AI chatbots on customer satisfaction and loyalty. This study intends to fill the gap. However, future research may conduct the same study, taking a representative sample across India. Future researchers may conduct the same study, taking more independent variables or different independent variables. Researchers in the future may take different mediating variables other than customer satisfaction.

7. ACKNOWLEDGMENT

This study is supported via funding from Prince Sattam bin Abdulaziz University project number (PSAU/2025/R/1446).

REFERENCES

Abdelmoety, Z.H., Aboul-Dahab, S., Agag, G. (2022), A cross cultural investigation of retailers commitment to CSR and customer citizenship behaviour: The role of ethical standard and value relevance. Journal of Retailing and Consumer Services, 64, 102796.

Aboul-Dahab, S., Agag, G., Abdelmoety, Z.H. (2021), Examining the Influence of cultural and ethical ideology on consumers' perceptions about the ethics of online retailers and its effects on their loyalty. Journal of Retailing and Consumer Services, 61, 102559.

Agag, G. (2019), E-commerce ethics and its impact on buyer repurchase intentions and loyalty: An empirical study of small and medium Egyptian businesses. Journal of Business Ethics, 154, 389-410.

Agag, G.M., El-Masry, A.A. (2017), Why do consumers trust online travel websites? Drivers and outcomes of consumer trust toward online travel websites. Journal of Travel Research, 56, 347-369.

Alhogail, A. (2018), Improving IoT technology adoption through improving consumer trust. Technologies, 6(3), 64.

Chen, J.S., Le, T.T.Y., Florence, D. (2021), Usability and responsiveness of artificial intelligence chatbot on online customer experience in e-retailing. International Journal of Retail and Distribution Management, 49(11), 1512-1531.

Chen, Y., Rorissa, A., Germain, C.A. (2015), Usability definitions in a dynamically changing information environment, Libraries and the Academy, 15(4), 601-621.

Chung, M., Ko, E., Joung, H., Kim, S.J. (2020), Chatbot e-service and customer satisfaction regarding luxury brand. Journal of Business Research, 117, 587-595.

Dehghani, M. (2018), Exploring the motivational factors on continuous usage intention of smartwatches among actual users. Behaviour and Information Technology, 37(2), 145-158.

Del Prete, M. (2021). Emotional artificial intelligence: detecting and managing customer emotions in automated customer service. Doctoral Thesis, University of Salerno. https://tesidottorato.depositolegale.it/bitstream/20.500.14242/311934/7/130327534348222773805806560257980801743.pdf

Eeuwen, M. (2017), Mobile Conversational Commerce: Messenger Chatbots as the Next Interface Between Businesses and Consumers [Master's thesis]. University of Twente. Available from: https://essay.utwente.nl/71706/1/van%20eeuwen_ma_bms.pdf

Ennajeh, L., Najar, T. (2024), Blockchain technology adoption through the UTAUT model: Exploring the mediating role of trust in technology. Journal of Telecommunications and the Digital Economy, 12(1), 328-355.

Farah, M.F., Hasni, M.J.S., Abbas, A.K. (2018), Mobile-banking adoption: Empirical evidence from the banking sector in Pakistan. International Journal of Bank Marketing, 36(7), 1386-1413.

Fornell, C., & Larcker, D. F. (1981). Evaluating structural equation models with unobservable variables and measurement error. Journal of marketing research, 18(1), 39-50.

Gao, L., Waechter, K.A. (2017), Examining the role of initial trust in user adoption of mobile payment Service: An empirical investigation. Information Systems Frontiers, 19(3), 525-548.

Ghanibardi, M. (2024), Factors that Impact Users' Attitudes toward Chatbots and Their Intentions to Use Chatbot in Online Services. Lithuania: Vilniaus Universitetas.

Hair, J.F. Jr., Sarstedt, M, Matthews, L.M, Ringle, C.M. (2016), Identifying and treating unobserved heterogeneity with FIMIX-PLS: Part I-Method. European Business Review, 28, 63-76.

Hair, J.F., Anderson, R.E., Tatham, R.L., Black, W.C. (1998), Multivariate Data Analysis. 5th ed. Upper Saddle River, NJ: Prentice Hall International.

Hair, J.F., Ringle, C.M., Sarstedt, M. (2019), PLS-SEM: Indeed a silver bullet. Journal of Marketing Theory and Practice, 19, 139-152.

Haugeland, I.K.F., Følstad, A., Taylor, C., Bjørkli, C.A. (2022), Understanding the user experience of customer service chatbots: An experimental study of chatbot interaction design. International Journal of Human-Computer Studies, 161, 102788.

Hentzen, J.K., Hoffmann, A., Dolan, R., Pala, E. (2022), Artificial intelligence in customer-facing financial services: A systematic literature review and agenda for future research. International Journal of Bank Marketing, 40(6), 1299-1336.

Ho, S.Y. (2006), The attraction of Internet personalization to Web users.

Electronic Markets, 16(1), 41-50.

Hsu, C.L., Lin, J.C.C. (2023), Understanding the user satisfaction and loyalty of customer service chatbots. Journal of Retailing and Consumer Services, 71, 103211.

Huang, D., Markovitch, D.G., Stough, R.A. (2024a), Can chatbot customer service match human service agents on customer satisfaction? An investigation in the role of trust. Journal of Retailing and Consumer Services, 76, 103600.

Huang, Z., Yan, X., Deng, J. (2024b), How social presence influences consumer well-being in live video commerce: The mediating role of shopping enjoyment and the moderating role of familiarity. Journal of Theoretical and Applied Electronic Commerce Research, 19(2), 725-742.

Hult, G.T.M., Morgeson, F.V 3rd, Sharma, U., Fornell, C. (2022), Customer satisfaction and international business: A multidisciplinary review and avenues for research. Journal of International Business Studies, 53(8), 1695-1733.

Hult, G.T.M., Neese, W.T., Bashaw, R.E. (2022), The relationship between customer satisfaction and loyalty: A moderated mediation model. Journal of Business Research, 141, 491-501.

Jang, M., Jung, Y., Kim, S. (2021), Investigating managers' understanding of chatbots in the Korean financial industry. Computers in Human Behavior, 120, 106747.

Jenneboer, L., Herrando, C., Constantinides, E. (2022), The impact of chatbots on customer loyalty: A systematic literature review. Journal of Theoretical and Applied Electronic Commerce Research, 17, 212-229.

Khan, M.A., Yasir, M., Khan, M.A. (2021), Factors affecting customer loyalty in the services sector. Journal of Tourism and Services, 12(22), 184-197.

Khan, M.S., Saengon, P., Alganad, A.M.N., Chongcharoen, D., Farrukh, M. (2020), Consumer green behaviour: An approach towards environmental sustainability. Sustainable Development, 28(5), 1168-1180.

Kraus, D., Reibenspiess, V., Eckhardt, A. (2019), How Voice Can Change Customer Satisfaction: A Comparative Analysis Between E-Commerce and Voice Commerce. Siegen: Internationale Tagung Wirtschaftsinformatik.

Krishna, B., Krishnan, S., Sebastian, M. (2023), Understanding the process of building institutional trust among digital payment users through national cybersecurity commitment trustworthiness cues: A critical realist perspective. Information Technology and People, 38, 714-756.

Kwangsawad, A., Jattamart, A. (2022), Overcoming customer innovation resistance to the sustainable adoption of chatbot services: A community-enterprise perspective in Thailand. Journal of Innovation and Knowledge, 7, 100211.

Lubbe, B., Ngoma, S. (2021), An exploration of customer satisfaction with artificial intelligence chatbots in the South African banking sector. South African Journal of Business Management, 52(1), 1-12.

Mogaji, E., Balakrishnan, J., Nwoba, A. C., & Nguyen, N. P. (2021). Emerging-market consumers' interactions with banking chatbots. Telematics and Informatics, 65, 101711.

Nicolescu, L., Tudorache, M.T. (2022), Human-computer interaction in customer service: The experience with AI chatbots-a systematic literature review. Electronics, 11(10), 1579.

Pillai, R., Sivathanu, B. (2020), Adoption of AI-based chatbots for hospitality and tourism. International Journal of Contemporary Hospitality Management, 32, 3199-3226.

Ren, R., Zapata, M., Castro, J., Dieste, O., Acuna, S.T. (2022), Experimentation for chatbot usability evaluation: A secondary study. Digital Object Identifier, 10, 12430-12464.

Salam, M.A., Jahed, M.A., Palmer, T. (2022), CSR orientation and firm performance in the Middle Eastern and African B2B markets: The role of customer satisfaction and customer loyalty. Industrial Marketing Management, 107, 1-13.

Saoula, O., Shamim, A., Mohd Suki, N., Ahmad, M.J., Abid, M.F., Patwary, A.K, Abbasi, A.Z. (2023), Building e-trust and e-retention in online shopping: The role of website design, reliability and perceived ease of use. Spanish Journal of Marketing-ESIC, 27(2), 178-201.

Shankar, V., Smith, A.K., Rangaswamy, A. (2003), Customer satisfaction and loyalty in online and offline environments. International Journal of Research in Marketing, 20(2), 153-175.

Sheehan, B., Jin, H.S., Gottlieb, U. (2020), Customer service chatbots: Anthropomorphism and adoption. Journal of Business Research, 115, 14-24.

Shiau, W.L., Chau, P.Y. (2016), Understanding behavioral intention to use a cloud computing classroom: A multiple model comparison approach. Information and Management, 53(3), 355-365.

Shiau, W.L., Sarstedt, M., Hair, J.F. (2019), Internet research using partial least squares structural equation modeling (PLS-SEM), Internet Research, 29(3), 398-406.

Sidaoui, K., Bouslama, Z., Ziane, Y. (2020), Enhancing customer satisfaction and loyalty through chatbots in the banking sector: The mediating role of trust. International Journal of Bank Marketing, 38(5), 1090-1115.

Slane, A., Pedersen, I. (2024), Bringing older people's perspectives on consumer socially assistive robots into debates about the future of privacy protection and AI governance. AI and Society, 40, 1-20.

Suhel, S.F., Shukla, V.K., Vyas, S., Mishra, V.P. (2020), Conversation to automation in banking through chatbot using artificial machine intelligence language. In: 2020 8th International Conference on Reliability, Infocom Technologies and Optimization (Trends and Future Directions) (ICRITO). IEEE. p611-618.

Tsai, W.H.S., Liu, Y., Chuan, C.H. (2021), How chatbots' social presence communication enhances consumer engagement: The mediating role of parasocial interaction and dialogue. Journal of Research in Interactive Marketing, 15(3), 460-482.

Valenzuela, A., Puntoni, S., Hoffman, D., Castelo, N., de Freitas, J., Dietvorst, B., Hilderbrand, C., Huh, Y.E., Meyer, R., Sweeney, M.E., Talaifar, S., Tomaino, G., Wertenbroch, K. (2024), How artificial intelligence constrains the human experience. Journal of the Association for Consumer Research, 9(3), 241-256.

Viardot, E. (2017), Trust and standardization in the adoption of innovation. IEEE Communications Standards Magazine, 1, 31-35.

Wang, E.S., Lin, R.L. (2017), Perceived quality factors of location-based apps on trust, perceived privacy risk, and continuous usage intention. Behaviour and Information Technology, 36(1), 2-10.

Wang, P., Shao, J. (2022), Escaping Loneliness through Tourist-Chatbot Interactions. In: Stienmetz, J.L., Ferrer-Rosell, B., Massimo, D., editors. Information and Communication Technologies in Tourism 2022: Proceedings of the ENTER 2022 eTourism Conference, January 11-14, 2022. p473-485.

Weck, M., Afanassieva, M. (2023), Toward the adoption of digital assistive technology: Factors affecting older people's initial trust formation. Telecommunications Policy, 47(2), 102483.

Wu, S.H., Ku, E.C. (2024), Aligning restaurants and artificial intelligence computing of food delivery service with product development. Journal of Hospitality and Tourism Technology, 15(3), 379-396.

Zikmund, W.G., Babin, B.J. (2015), Essentials of Marketing Research. United States: Cengage Learning.