International Review of Management and Marketing

ISSN: 2146-4405

available at http: www.econjournals.com

International Review of Management and Marketing, 2025, 15(4), 204-212.

Model of Purchase Intention of ECO Label Building Material Products

Dani Sunarto[1], Mohammad Suyanto[2], Anas Hidayat[3], Tony Wijaya[4]*

[1]Universitas Islam Indonesia, Indonesia, [2]Universitas Amikom Yogyakarta, Indonesia, [3]Universitas Islam Indonesia, Indonesia, [4]Universitas Negeri Yogyakarta, Indonesia. *Email: Tony@uny.ac.id

Received: 14 December 2024 **Accepted:** 06 May 2025 **DOI:** https://doi.org/10.32479/irmm.18658

ABSTRACT

Consumer concerns due to environmental damage and health problems encourage consumers to use eco-friendly products. In this regard, this study examined the influence of environmental concern variables and ecolabel knowledge in influencing the purchase intention of ecolabel paint products with environmental awareness as a mediating variable to test whether there are differences between male and female consumers. To test the research hypothesis, an online survey of 200 respondents in Indonesia was conducted. The results showed that environmental concern and ecolabel knowledge variables could not influence the ecolabel purchase intention variable directly, while the mediation model of environmental awareness of environmental concern and ecolabel knowledge variables had a significant influence on the ecolabel purchase intention variable. The test results based on gender, environmental concern and ecolabel knowledge mediated by environmental awareness in influencing ecolabel purchase intention for male were significant while for female were not significant. This analysis showed the importance of environmental awareness as a mediating variable in influencing the purchase intention of ecolabel paint products based on gender.

Keywords: Environmental Concern, Eco Label Knowledge, Environmental Awareness, Eco Label Purchase Intention
JEL Classifications: M10, M31

1. INTRODUCTION

Green marketing is a series of marketing activities that start from product procurement to product delivery to end users in an environmentally friendly manner (Sharma and Kushwaha, 2019). Environmentally friendly marketing encourages the purchase of environmentally friendly products among customers and potential customers because it has the aim of maintaining sustainability (Sharma et al., 2015). Large companies are starting to carry out an environmentally friendly movement against the backdrop of concerns about issues of environmental damage including global warming, environmental degradation, excessive use of non-renewable resources and corporate responsibility for the environment (Dangelico and Vocalelli, 2017).

Consumers are currently faced with a choice of both conventional and environmentally friendly or ecolabeled products. Dekhili and Nguyen (2021) explain that ecolabel products in European countries are growing rapidly but they ignore the development of ecolabels in developing countries, one of which is in Asia where the environmentally friendly market is growing rapidly. Ratification of education on environmental sustainability is increasing, increasing people's purchasing power makes Indonesia a potential market, but there is relatively little information about environmentally friendly consumer behavior in developing countries compared to developed countries (Fachrurazi et al., 2022). Although Indonesia is a potential market for ecolabel products. Wang et al. (2022) underline, that low ecolabel knowledge cannot encourage purchase intentions for ecolabeled products because most eco-labels display simple icons and contain limited information, creating barriers for consumers.

This Journal is licensed under a Creative Commons Attribution 4.0 International License

According to Zhang and Luo, (2023) theory of planned behavior (TPB) can be used to predict green purchase intentions. Modified theory of planned behavior developed by Ajzen (2005) as a basic framework in understanding intentions and behavior by adding background factors including personal, social, and information. Research on the purchase intention of ecolabel products that refer to the theory of planned behavior (TPB) has been carried out such as, environmental concern (De Canio et al., 2021; Tan and Goh, 2018), ecolabel knowledge (Lee et al., 2020; Panico et al., 2022), environmental awareness (De Silva et al., 2021; Hojnik et al., 2019). Some of the findings of green product purchase intention research confirm the existence of antecedent variables, namely environmental awareness and ecolabel knowledge, which refer to the theory of planned behavior (TPB), but there is no research that involves social background, namely elements of environmental awareness and gender comprehensively in the research model. Research on environmental awareness, ecolabel knowledge, and gender-based environmental awareness in influencing ecolabel purchase intentions still needs to be explored more deeply (Hojnik et al., 2019).

Several researchers have emphasized the importance of gender in ecolabel purchase intention (Jin and Zhao, 2021; Sreen et al., 2018). Previous research has not involved gender aspects comprehensively in the theory of planned behavior, therefore this study examines the variables of environmental concern, ecolabel knowledge mediated by environmental awareness in influencing the purchase intention of ecolabel products based on gender. Research on the purchase intention of ecolabel products still needs to be explored in developing countries such as Indonesia because information on environmentally friendly consumer behavior is still relatively little compared to developed countries.

2. LITERATURE REVIEW

Ecolabel products according to Jin and Zhao (2021) are required to minimize the use of raw materials and additives in production. Ecolabels are market-based instruments that provide information about product friendliness to the environment so as to provide choices for consumers (D'Souza et al., 2021).

2.1. Environmental Concern

Environmental concern is defined as a person's concern for the environment that can develop green purchase intentions (Newton et al., 2015). Environmental concern refers to the extent to which individuals perceive and respond to environmental issues of pollution, climate change, and conservation (Niklas and Tommy, 1999).

2.2. Ecolabel Knowledge

Liu et al. (2017), stated that eco-friendly knowledge or ecolabels are conceptualised and measured as consumer knowledge of green products and its features. Ecolabel knowledge is a significant factor in green purchase intentions, consumers with high levels of knowledge tend to have high intentions for eco-friendly products (Lee et al., 2020).

2.3. Environmental Awareness

Awareness according to Bandura (2006) is an emerging brain activity with high-level control functions. Environmental awareness has a key role in impacting purchase intention of eco product (Kim and Lee, 2023). Environmental awareness is also affected by social factors including family, and company advertisements in the form of eco-friendly text or logos that can encourage purchase intentions for eco product (Cai et al., 2017; Gaspar Ferreira and Fernandes, 2022).

2.4. Purchase Intention of Ecolabel Product

Ecolabel purchase intention refers to the customer's tendency to purchase a particular product as needed to save the environment (Panopoulos et al., 2023). Consumers who are aware of the benefits of ecolabel products are more likely to buy ecolabel products (Kim and Lee, 2023). Ecolabel purchase intention by gender that men emphasise masculine affirmation while women are attracted to feminine appeal (Jin and Zhao, 2021; Sreen et al., 2018). Green purchase intentions are often associated with femininity, which may create barriers for the male gender to adopt green behaviours (Brough and Boase, 2019; Shang and Peloza, 2016).

2.5. Empirical Review and Hypothesis Development

2.5.1. The effect of environmental concern on ecolabel purchase intention

Environmental concerns can drive ecolabel purchase intentions based on the perception that ecolabel products can reduce environmental damage (Prakash and Pathak, 2017). Environmental concern is a key factor underlying purchase intention and increasing public awareness as the use of ecolabel products does not harm the environment (Marrucci et al., 2021). Fontes et al. (2021) found that environmental concerns between men and women are different, women are more concerned about the environment than men since women are more actively involved in taking affirmative action for the environment.

H_1: The effect of environmental awareness based on gender on purchase intention of ecolabel products has a positive effect.

2.5.2. The effect of ecolabel knowledge on ecolabel purchase intention

Ecolabel knowledge can reduce uncertainty and increase the trust in the purchase intention of eco-friendly products (Panico et al., 2022). Previous studies on obtaining ecolabeled products encountered several obstacles, including the limitation of ecolabel knowledge, the lack of ecolabel information, and the lack of demand for ecolabel (Marrucci et al., 2021; Sharma and Kushwaha, 2019). Some of the previous studies indicated that ecolabel knowledge affects ecolabel purchase intentions (Di Martino et al., 2019; Liang et al., 2020; Liu et al., 2017). Findings conducted by Wijaya (2022) stated that psychologically there are differences in information processing between genders, men process information based on congnitive aspects while women are based on affective aspects.

H_2: The effect of ecolabel knowledge based on gender on purchase intention of ecolabels has a positive effect.

2.5.3. The effect of environmental concern on environmental awareness

Environmental concern is an important factor influencing environmental awareness. Hojnik et al. (2019) mentioned that environmental concerns have a positive effect on consumer

awareness of eco-friendly products and provide consumer perceptions to have environmental responsibility. The results of the study consistently suggested that women have stronger values and beliefs compared to men (Xiao and McCright, 2015).

H_3: The effect of environmental concern on environmental awareness based on gender has a positive effect.

2.5.4. The effect of ecolabel knowledge on environmental awareness

Research carried out by Taufique et al. (2017) stated that although ecolabel knowledge can contribute to improving environmental awareness, other factors must be considered to understand consumer behaviour. Ecolabel knowledge can impact environmental awareness by promoting consumer understanding of eco-friendly products and its production process (Hossain et al., 2022; Taufique et al., 2017).

H_4: The effect of ecolabel knowledge on environmental awareness based on gender has a positive effect.

2.5.5. The effect of environmental concern on purchase intention of ecolabel through environmental awareness

Environmental awareness may affect eco-friendly purchasing behaviour, in this case ecolabel products. Environmental awareness shows a strong personal commitment to environmental concerns that encourage consumer purchase intentions (Tan and Goh, 2018). Consumers who have environmental awareness will have a greater intention to buy eco-friendly products. (Hojnik et al., 2019).

H_5: Environmental awareness based on gender has a positive influence on purchase intention of ecolabel paint products by environmental awareness as a mediating variable.

2.5.6. The effect of ecolabel knowledge on purchase intention of ecolabel through environmental awareness

The impact of environmental awareness on green purchasing behaviour is considered an important aspect based on Tan et al. (2019) who pointed out the importance of personal commitment to shape purchasing decisions, while purchasing decisions are determined by one's intentions. The purchase intention of green products is affected by external factors that arouse consumer feelings towards the environment resulting in environmentally friendly behaviour. Lee et al. (2020) suggested that if ecolabel knowledge is high, this could improve ecolabel purchase intentions.

H_6: Ecolabel knowledge based on gender has a positive influence on purchase intention of ecolabels through environmental awareness.

2.5.7. The effect of environmental awareness on purchase intention of ecolabels

Environmental awareness can impact an individual's actions to care for the environment. (Safari et al., 2018). Environmental awareness is a form of individual motivation due to environmental damage. De Silva et al. (2021) argued that the purchase intention of ecolabels is affected by environmental awareness. Research conducted in Poland found that women were more environmentally aware compared to men as women assessed eco-friendly products based on quality and perceived benefits while men only viewed the product packaging. Additionally, women were more aware of zero waste and eco-friendly advertising campaigns on social media (Witek and Kuźniar, 2020).

H_7: Environmental awareness has a positive effect on purchase intention of ecolabels based on gender.

3. METHODOLOGY

This research is designed to find answers to the problems faced in the purchase intention of ecolabeled products. Based on the picture of the purchase intention model for ecolabel products, a research framework model can be arranged as shown in Figure 1.

This research was a quantitative study to obtain primary data by distributing questionnaires directly to respondents. The questionnaire used six Linkert scales of 1 (strongly disagree) to 6 (strongly agree). The sample in this study were several households grouped by gender. This research was carried out in the Indonesia from February to March 2024 with a sample of three cities including Jakarta, Yogyakarta, and Surabaya. Data were obtained from 206 respondents while only 200 met the criteria.

This study utilised the SEM-AMOS method with multi-group gender testing that has advantages, such as able to test the model as a whole, able to model intermediate variables, able to test the coefficients of several groups of subjects, easy to read the analysis results, able to overcome abnormal data, able to read the model as a whole (Hair et al., 2010).

3.1. Measurement

This study employed eighteen measurement items covering the environmental concern variable adopted from five indicator items (Marquart-Pyatt, 2007; Song et al., 2019). The knowledge variable was measured using three items which were adopted from (Marquart-Pyatt, 2007). The awareness variable was measured using five measurement items adopted from (Gaspar Ferreira and Fernandes, 2022). Lastly, the purchase intention of ecolabel variable was determined using five items which were adopted from (Song et al., 2019).

3.2. Data Collection

Sampling characteristics from questionnaires distributed to 200 respondents in three cities in Indonesia, they were Jakarta, Yogyakarta and Surabaya showed a majority (67%) of the respondents live in Yogyakarta. There were 106 (53%) male respondents and 94 (47%) female respondents. Further demographic information is summarised in Table 1.

Based on the test results in Table 2, the average variance extracted (AVE) and composite reliability (CR) values of each environmental concern variable, ecolabel knowledge, environmental awareness, and purchase intention of ecolabel indicated that the AVE and CR values were above ≥0.70, therefore the validity and reliability can be accepted according to the rules (Hair et al., 2021). In the SEM-AMOS testing, test results of R^2 had a value of 0.881. Therefore, it can be concluded that the dependent latent variable can be described by the independent latent variable by 88.1%, while the remaining 11.9% is described by variables outside this study.

4. RESULTS

4.1. Confirmatory Factor Analysis (CFA)

The confirmatory analysis test used AMOS 22 to assess the measurement validity of endogenous constructs and exogenous constructs (Hair et al., 2011). The model analysis result is as shown in Figure 2.

The test result Figure 2 shows the CFA results of the exogenous constructs were relatively good with the score Chi-square = 5.840, Probability = 0.648 ≥ 0.05, RMSEA= 0.00 ≤ 0.08, GFI = 0.994 ≥ 0.90, AGFI 0.956 ≥ 0.90, TLI = 1.000 ≥ 0.95, CFI = 1.000 ≥ 0.94.

The test result Figure 3 shows the CFA results of the endogenous constructs were relatively good with the score Chi-square = 18.010, Probability = 0.648 ≥ 0.05, RMSEA = 0.000 ≤ 0.08, GFI = 0.950 ≥ 0.90, AGFI = 0.902 ≥ 0.90, TLI = 0.994 ≥ 0.95, CFI = 0.996 ≥ 0.94. The results of CFA testing of exogenous constructs and endogenous constructs showed a good level of compatibility.

The test result Figure 4 shows the analysis of the structural equation indicated the score Chi square =121.506, Probability = 0.91 ≥ 0.05, RMSEA = 0.022 ≤ 0.08, GFI = 0.0994 ≥ 0.90, AGFI 0.956 ≥ 0.90, TLI = 1.000 ≥ 0.95, CFI = 1.000 ≥ 0.94. The result suggested a good level of compatibility in the measurement model.

Table 1: Respondent profile

Feature	Characteristic	Result (%)
Number of respondents	Male	106 (53)
	Female	94 (47)
Latest Education	Primary – High school (SD-SMA)	92 (46)
	Diploma	25 (12.5)
	Bachelor (S1)	65 (32.5)
	Master (S2)	14 (7)
	Doctoral (S3)	3 (1.5)
	Profession	1 (0.5)
Age	20-30 years old	119 (59.5)
	31-40 years old	40 (20)
	41-50 years old	25 (12.5)
	51-60 years old	16 (8)
Respondent domicile	Jakarta	46 (23)
	Yogyakarta	134 (67)
	Surabaya	21 (10)

Table 2: Results of validity and reliability testing

Variable	Indicator	Loading factor (SLF)	Description	CR	AVE	Description
EC	EC1	0.905	Valid	0.946	0.780	Reliable
	EC2	0.886				
	EC3	0.897				
	EC4	0.886				
	EC5	0.841				
EK	EK1	0.888	Valid	0.941	0.842	Reliable
	EK2	0.931				
	EK3	0.934				
EA	EA1	0.793	Valid	0.942	0.767	Reliable
	EA2	0.874				
	EA3	0.897				
	EA4	0.904				
	EA5	0.906				
PI	PI1	0.921	Valid	0.965	0.849	Reliable
	PI2	0.945				
	PI3	0.916				
	PI4	0.91				
	PI5	0.916				

Figure 1: Research framework model

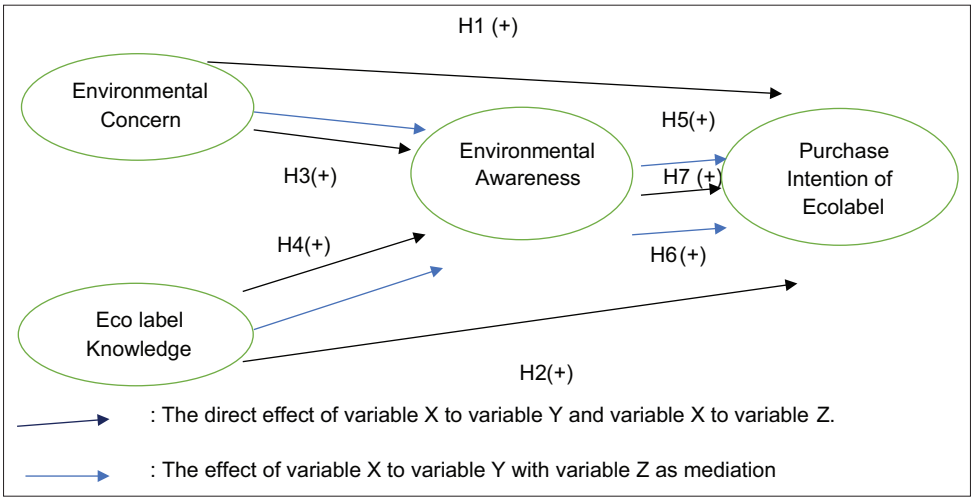

Figure 2: Confirmatory Testing of exogenous constructs

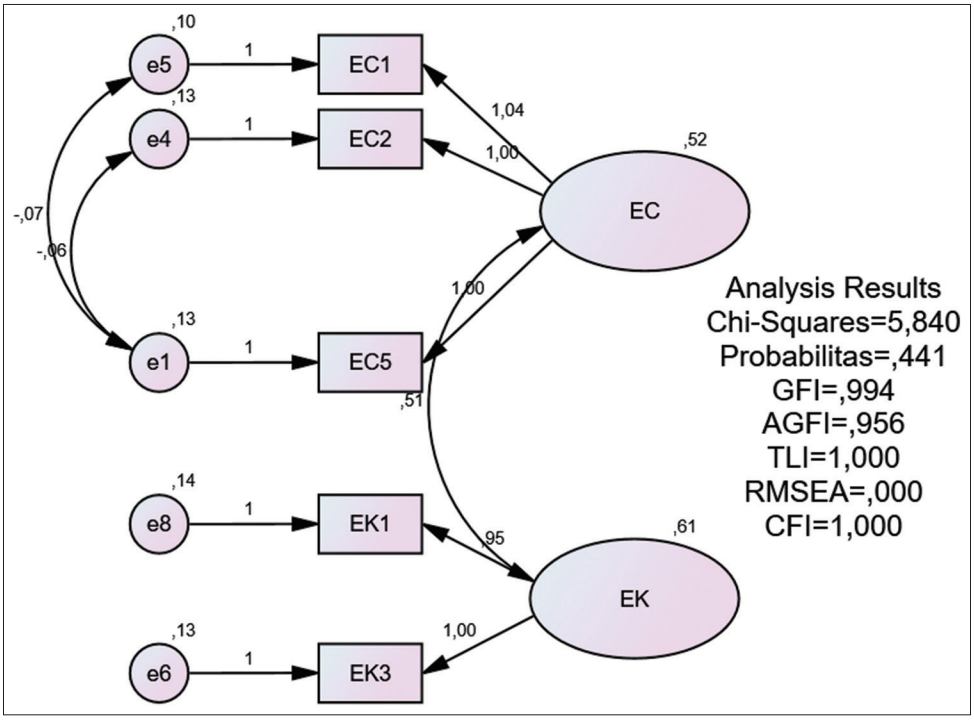

Figure 3: Confirmatory testing of endogenous constructs

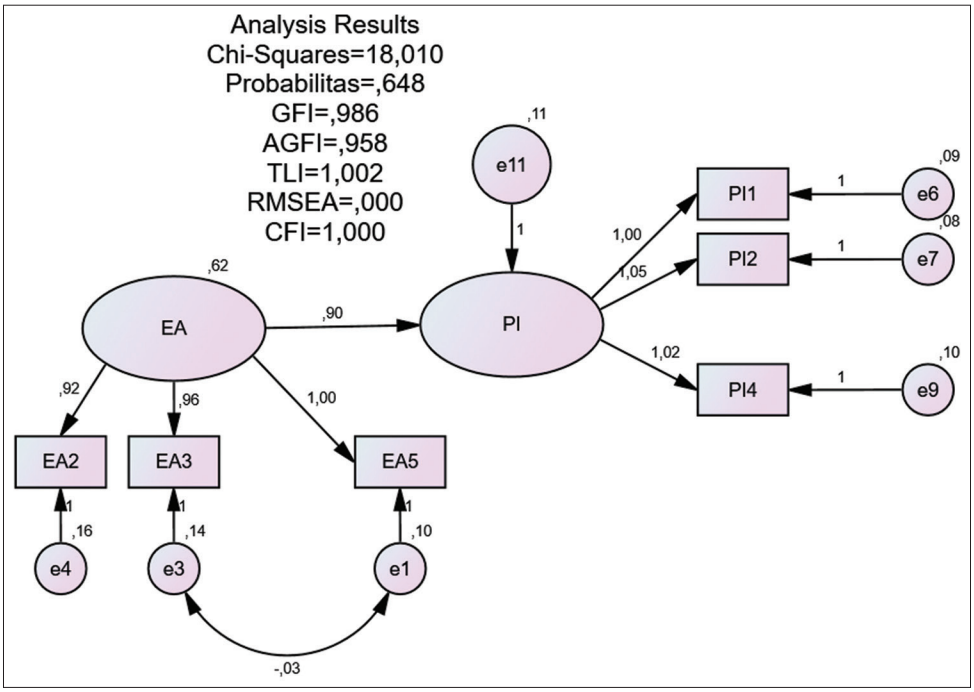

Based on the test results Table 3, for the male group, the environmental concern variable had no significant effect on the purchase intention of ecolabel with a probability value of 0.485, indicating that H_1 was rejected. Ecolabel knowledge on purchase intention of ecolabel did not have a significant effect with a probability value of 0.314 meaning H_2 was rejected. The effect of environmental concern on environmental awareness had a significant effect with a probability value of 0.000, indicating that H3 was accepted. The effect of ecolabel knowledge on purchase intention of ecolabel had significant effect with probability value of 0.001 meaning H_4 was accepted. The effect of environmental awareness on purchase intention of ecolabel was significant with a probability value of 0.007 meaning H_7 was accepted.

Based on the mediation test results for male gender on the table 4, the effect of environmental concern on purchase intention of ecolabel through environmental awareness as a mediating variable showed a probability value of 0.013, hence H_5 was accepted. The effect of ecolabel knowledge on purchase intention through

Figure 4: Analysis of structural equations

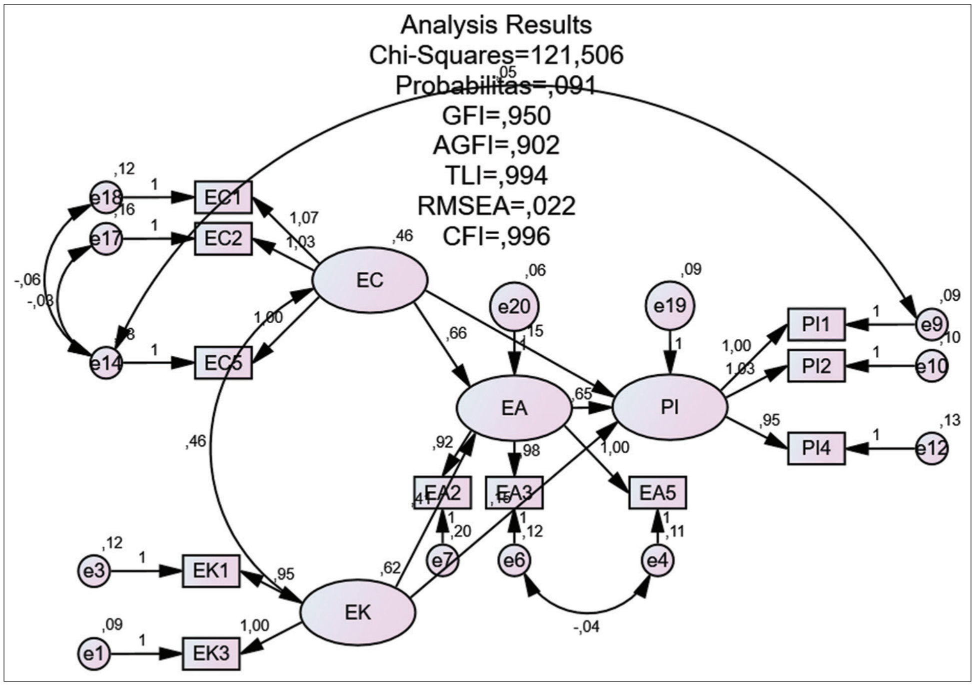

Table 3: Test results of direct effects based on male gender

Hypothesis	Variable	Cr	Sig	Conclusion
H_1	Environmental concern → Purchase intention of ecolabel	0.699	0.485	Not Significant
H_2	Ecolabel knowledge → Purchase intention of ecolabel	1.007	0.314	Not Significant
H_3	Environmental concern → Environmental awareness	3.951	0.000	Significant
H_4	Ecolabel knowledge → Environmental awareness	3.273	0.001	Significant
H_7	Environmental awareness → Purchase intention of ecolabel	2.693	0.007	Significant

Table 4: Indirect relationship of environmental awareness as a mediating variable based on male gender

Hypothesis	Variable	Level of significance	Notes
H_5	Environmental concern → Purchase intention of ecolabel	0.013 ≤0.05	Significant
H_6	Ecolabel knowledge → Purchase intention of ecolabel	0.018 ≤0.05	Significant

environmental awareness had a significant effect with a probability value of 0.018, therefore H6 was accepted.

The female gender causality test results are addressed Table 5, it can be seen that the environmental concern variable on purchase intention of ecolabel did not have an effect with a probability value of 0.531, thus H_1 was rejected. The ecolabel knowledge variable had no significant effect on purchase intention of ecolabel in the female group with a probability value of 0.610, so H_2 was rejected. The effect of environmental concern variables on environmental awareness did not have a significant effect with a probability value of 0.979, so H_3 was rejected. The ecolabel knowledge variable had a significant effect on environmental awareness with a probability value of 0.016, so H_4 was accepted. The environmental awareness variable also had a significant effect on purchase intention of ecolabel in female groups with a probability value of 0.028, then H_7 was accepted.

The results of indirect testing of female gender can be viewed in Table 6, the variable environmental concern towards the purchase intention of ecolabel through environmental awareness resulted in no significant effect with a probability value of 0.489, then H_5 is denied. The ecolabel knowledge variable in influencing the purchase intention of ecolabel through environmental awareness did not have a significant effect with a probability value of 0.052, so H6 was rejected.

5. DISCUSSION

The influence of social factors on the purchase intention of ecolabel paint products has a positive effect. Consumers, both men and women, who are influenced by social factors will be more environmentally aware. This means that people who are influenced by social factors tend to behave in an environmentally friendly manner and tend to raise awareness to encourage purchase intention of ecolabel products. This study also found that environmental awareness and ecolabel knowledge for both genders did not have a significant direct relationship to the purchase intention of ecolabel products, since people who are not environmentally aware will not be interested in using ecolabel paint products.

People who are unaware of health and environmental impacts will not buy environmentally friendly products as they are not considering the implications of using a product. This research

Table 5: Test results of direct effects based on female gender

Hypothesis	Variable	Cr	Sig	Conclusion
H_1	Environmental concern → Purchase intention of ecolabel	0.626	0.531	Not Significant
H_2	Ecolabel knowledge → Purchase intention of ecolabel	0.511	0.610	Not Significant
H_3	Environmental Concern → Environmental awareness	0.026	0.979	Not Significant
H_4	Ecolabel knowledge → Environmental awareness	2.408	0.016	Significant
H_7	Environmental awareness → Purchase intention of ecolabel	2.199	0.028	Significant

Table 6: Indirect relationship of environmental awareness as a mediating variable based on female gender

Hypothesis	Variable	Level of significance	Notes
H_5	Environmental concern → Purchase intention of ecolabel	0.489 ≤0.05	Not Significant
H_6	Ecolabel knowledge → Purchase intention of ecolabel	0.05 2≤0.05	Not Significant

showed that the purchase intention of ecolabel products based on male gender, environmental awareness could mediate the effect of environmental concern on the purchase intention of ecolabel products. However, for the female gender, environmental awareness was unable to mediate the influence of environmental concern on the purchase intention of ecolabel. This research result contradicted the research conducted by (Hojnik et al., 2019).

Ecolabel knowledge in influencing purchase intention of ecolabel products mediated by environmental awareness based on male gender had a positive effect whereas for female gender the results were not significant, thus this study contradicts Liang et al. (2020) research who mentioned the female gender has subjective knowledge compared to the male gender.

This study has found that the male gender, which is perceived with a masculine image, was encouraged to buy eco-friendly products, one of which was brand competence and social encouragement that can improve masculine image. Men are encouraged to buy eco-friendly products inseparable from masculine strategic branding by understanding gender stereotypes that shape environmentally friendly behaviour (Brough et al., 2016). The results of this study are aligned with research conducted by Felix et al. (2022), suggested that masculine packaging is a branding tool that can encourage the male gender to buy eco-friendly products. Research undertaken by Hojnik et al. (2019) showed that environmental awareness is a important variable in promoting purchase intention of ecolabel products. It is proven that the role of the social environment can influence environmental awareness which can encourage purchase intention of ecolabel products based on gender.

6. CONCLUSION

In the purchase intention of ecolabel paint products, the characteristics of gender should be considered due to different purchase intentions of ecolabel paint products in terms of environmental concern, ecolabel knowledge, and environmental awareness. Concern, knowledge, and awareness influenced the purchase intention of ecolabel paint products in the male gender, while concern and awareness did not affect the purchase intention of ecolabel paint products for female gender. This finding emphasised the need for encouragement from the social environment to raise environmental concern that can grow awareness since the variables of ecolabel awareness and knowledge of both gender did not have a direct effect on the purchase intention of ecolabel paint products. This study included the social element of environmental awareness as a mediating variable so that it was proved that the environmental awareness variable was very important to increase the purchase intention of ecolabel paint products.

The theoretical implications in this study motivate ecolabel purchase intention with Ajzen (2005) theory of planned behavior, using the mediating variable of environmental awareness intended to look further at the psychological factors of consumer purchase intention towards ecolabel products. The practical implications in this study are expected to encourage marketers to consider several factors in marketing ecolabel products by fostering environmental awareness, ecolabel knowledge and environmental awareness to encourage ecolabel purchase intentions. Socially, men are more concerned with interacting socially in environmentally friendly behavior so that male group interactions are considered to be more dominant in the contest of purchase intention of ecolabel products in the building materials industry. Women's groups interact less with the social environment, so there is no growth in environmental awareness, so marketers need to develop social aspects that can encourage environmental awareness.

This study is also inseparable from several research limitations, one of which is limited in the purchase intention of ecolabeled products, further research is expected to examine actual purchases. This study needs to add other variables because the variables tested include environmental awareness, ecolabel knowledge, environmental awareness, and purchase intention of ecolabeled paint products have an R^2 value of 88.1% there are still 11.1% variables that are outside this study so there are still many other variables that need to be explored in the model of purchase intention of environmentally friendly products with multi-group gender testing. This research is limited to the purchase intention of ecolabel products in the building materials industry; therefore the results of this study cannot be generalized in all industries.

REFERENCES

Ajzen, I. (2005), Attitudes, Personality and Behavior. 2nd ed. United States: McGraw Hill.

Bandura, A. (2006), Toward a psychology of human gency. Perspectives on Psychological Science, 1(2), 164-180.

Brough, A.R., Wilkie, J.E.B., Ma, J., Isaac, M.S., Gal, D. (2016), The green-feminine stereotype and its effect on sustainable consumption.

Journal of Consumer Research, 43(4), 567-582.

Brough, P., Boase, A. (2019), Occupational stress management in the legal profession: Development, validation, and assessment of a stress-management instrument. Australian Journal of Psychology, 71(3), 273-284.

Cai, Z., Xie, Y., Aguilar, F.X. (2017), Eco-label credibility and retailer effects on green product purchasing intentions. Forest Policy and Economics, 80, 200-208.

Dangelico, R.M., Vocalelli, D. (2017), Green marketing: An analysis of definitions, strategy steps, and tools through a systematic review of the literature. Journal of Cleaner Production, 165, 1263-1279

Dekhili, S., Nguyen, T.P. (2021), Green consumption in Vietnam: Effects of eco-certification, brand, and moderate incongruity of their origins on purchase intent. Recherche et Applications en Marketing (English Edition), 36(3), 25-49.

De Canio, F., Martinelli, E., Endrighi, E. (2021), Enhancing consumers' pro-environmental purchase intentions: The moderating role of environmental concern. International Journal of Retail and Distribution Management, 49(9), 1312-1329.

De Silva, M., Wang, P., Kuah, A.T.H. (2021), Why wouldn't green appeal drive purchase intention? Moderation effects of consumption values in the UK and China. Journal of Business Research, 122, 713-724.

Di Martino, J., Nanere, M.G., DSouza, C. (2019), The effect of pro-environmental attitudes and eco-labelling information on green purchasing decisions in Australia. Journal of Nonprofit and Public Sector Marketing, 31(2), 201-225.

D'Souza, C., Taghian, M., Brouwer, A.R. (2021), Ecolabels information and consumer self-confidence in decision making: A strategic imperative. Journal of Strategic Marketing, 29(2), 141-157.

Fachrurazi, F., Purwanto, F., Dewianawati, D., Purwoko, B., Darmawan, D. (2022), Medical products and environmentally friendly purchase intention: What is the role of green consumers behavior, environment concern, and recycle behavior?. Frontiers in Public Health, 10, 960654.

Felix, R., González, E. M., Castaño, R., Carrete, L., Gretz, R.T. (2022), When the green in green packaging backfires: Gender effects and perceived masculinity of environmentally friendly products. International Journal of Consumer Studies, 46(3), 925-943.

Fontes, E., Moreira, A.C., Carlos, V. (2021), The influence of ecological concern on green purchase behavior. Management and Marketing, 16(3), 246-267.

Gaspar Ferreira, A., Fernandes, M.E. (2022), Sustainable advertising or ecolabels: Which is the best for your brand and for consumers' environmental consciousness? Journal of Marketing Theory and Practice, 30(1), 20-36.

Hair, J.F, Hult, G.T.M., Ringle, C.M., Sarstedt, M., Danks, N.P., Ray, S. (2021), Partial least squares structural equation modeling (PLS-SEM) using R. In: Practical Assessment, Research and Evaluation. Vol. 21. Germany: Springer Nature.

Hair, J.F., Black, C.W., Babin, J.B., Anderson, E.R. (2010), Multivariate Data Analysis. 7th ed., Vol. 12, New Jersey: Pearson Prentice Hall.

Hair, J.F., Ringle, C.M., Sarstedt, M. (2011), PLS-SEM: Indeed a silver bullet. Journal of Marketing Theory and Practice, 19(2), 139-152.

Hojnik, J., Ruzzier, M., Konečnik Ruzzier, M. (2019), Transition towards sustainability: Adoption of eco-products among consumers. Sustainability, 11(16), 4308.

Hossain, I., Nekmahmud, M., Fekete-Farkas, M. (2022), How do environmental knowledge, eco-label knowledge, and green trust impact consumers' pro-environmental behaviour for energy-efficient household appliances? Sustainability, 14(11), 6513.

Jin, J., Zhao, Q. (2021), Computers and industrial engineering eco-labelled product consumption analysis and incentive-penalty mechanism design by using a system dynamics approach. Computers and Industrial Engineering, 153, 107055.

Kim, N., Lee, K. (2023), Environmental consciousness, purchase intention, and actual purchase behavior of eco-friendly products: The moderating impact of situational context. International Journal of Environmental Research and Public Health, 20(7), 75312.

Lee, E.J., Bae, J., Kim, K.H. (2020), The effect of environmental cues on the purchase intention of sustainable products. Journal of Business Research, 120, 425-433.

Liang, T., Situmorang, R.O.P., Liao, M., Chang, S. (2020), The Relationship of perceived consumer effectiveness, subjective knowledge, and purchase intention on carbon label products-a case study of carbon-labeled packaged tea products in Taiwan. Sustainability, 12(19), 7892.

Liu, Y., Segev, S., Villar, M.E. (2017), Comparing two mechanisms for green consumption: Cognitive-affect behavior vs theory of reasoned action. Journal of Consumer Marketing, 34(5), 442-454.

Marquart-Pyatt, S.T. (2007), Concern for the environment among general publics: A cross-national study. Society and Natural Resources, 20(10), 883-898.

Marrucci, L., Iraldo, F., Daddi, T. (2021), Investigating the management challenges of the EU Ecolabel through multi-stakeholder surveys. International Journal of Life Cycle Assessment, 26(3), 575-590.

Newton, J.D., Tsarenko, Y., Ferraro, C., Sands, S. (2015), Environmental concern and environmental purchase intentions: The mediating role of learning strategy. Journal of Business Research, 68(9), 1974-1981.

Niklas, F., Tommy, G. (1999), Environmental concern: Conceptual definitions, measurement methods, and research findings. Journal of Environmental Psychology, 19, 369-382.

Panico, T., Caracciolo, F., Furno, M. (2022), Analysing the consumer purchasing behaviour for certified wood products in Italy. Forest Policy and Economics, 136, 102670.

Panopoulos, A., Poulis, A., Theodoridis, P., Kalampakas, A. (2023), Influencing green purchase intention through eco labels and user-generated content. Sustainability, 15(1), 764.

Prakash, G., Pathak, P. (2017), Intention to buy eco-friendly packaged products among young consumers of India: A study on developing nation. Journal of Cleaner Production, 141, 385-393.

Safari, A., Salehzadeh, R., Panahi, R., Abolghasemian, S. (2018), Multiple pathways linking environmental knowledge and awareness to employees' green behavior. Corporate Governance: The International Journal of Business in Society, 18(1), 81-103.

Shang, J., Peloza, J. (2016), Can "Real" men consume ethically? How ethical consumption leads to unintended observer inference. Journal of Business Ethics, 139(1), 129-145.

Sharma, N.K., Verma, C.S., Chariar, V.M., Prasad, R. (2015), Eco-friendly flame-retardant treatments for cellulosic green building materials. Indoor and Built Environment, 24(3), 422-432.

Sharma, N.K., Kushwaha, G.S. (2019), Eco-labels: A tool for green marketing or just a blind mirror for consumers. Electronic Green Journal, 1(42), G314233710.

Song, Y., Qin, Z., Yuan, Q. (2019), The impact of eco-label on the young Chinese generation: The mediation role of environmental awareness and product attributes in green purchase. Sustainability, 11(4), 973.

Sreen, N., Purbey, S., Sadarangani, P. (2018), Impact of culture, behavior and gender on green purchase intention. Journal of Retailing and Consumer Services, 41, 177-189.

Tan, C.N.L., Ojo, A.O., Thurasamy, R. (2019), Determinants of green product buying decision among young consumers in Malaysia. Young Consumers, 20(2), 121-137.

Tan, W.L., Goh, Y.N. (2018), The role of psychological factors in influencing consumer purchase intention towards green residential building. International Journal of Housing Markets and Analysis, 11(5), 788-807.

Taufique, K.M.R., Vocino, A., Polonsky, M.J. (2017), The influence

of eco-label knowledge and trust on pro-environmental consumer behaviour in an emerging market. Journal of Strategic Marketing, 25(7), 511-529.

Wang, X., Du, Y., Liu, Y., Wang, S. (2022), Telling you more fluently: Effect of the joint presentation of eco-label information on consumers' purchase intention. International Journal of Environmental Research and Public Health, 19(20), 13713.

Wijaya, T. (2022), Perceived values and purchase behavior of online game attribute products: Gender overview. Business Informatics, 16(3), 68-84.

Witek, L., Kuźniar, W. (2020), Green purchase behavior: The effectiveness of sociodemographic variables for explaining green purchases in emerging market. Sustainability, 13(1), 209.

Xiao, C., McCright, A.M. (2015), Gender differences in environmental concern. Environment and Behavior, 47(1), 17-37.

Zhang, W., Luo, B. (2023). Predicting consumer intention toward eco-friendly smart home services: extending the theory of planned behavior. Economic Change and Restructuring, 56(5), 3335-3352.