International Review of Management and Marketing

ISSN: 2146-4405

available at http: www.econjournals.com

International Review of Management and Marketing, 2025, 15(4), 361-370.

Dynamic Information Technology Workforce: Examining the Influence of Resilience, Well-being, Work Culture, Work-life Balance, and Self-efficacy on Workplace Commitment

Jasmine Wilson[1]*, Savarimuthu Arulandu[2], J. Michael Sammanasu[2]

[1]Research Scholar, Department of Management Studies, St. Joseph's College (Autonomous), Affiliated with Bharathidasan University, Tiruchirappalli, Tamil Nadu, India, [2]Department of Management Studies, St. Joseph's College (Autonomous), Affiliated with Bharathidasan University, Tiruchirappalli, Tamil Nadu, India. *Email: jasminewilson.phd@gmail.com

Received: 27 November 2024 **Accepted:** 29 April 2025 **DOI:** https://doi.org/10.32479/irmm.18385

ABSTRACT

The IT sector, which is competitive and rapidly evolving, consistently discusses the topic of employee commitment. Commitment has the potential to manage employee turnover, boost productivity, and foster innovation. Therefore, the impact of resilience, well-being, work-life balance, self-efficacy, and work culture on employee commitment is the focus of this study. We study the impact of these five characteristics on employee commitment, a crucial attribute for the performance of any organization and employee satisfaction, using a sample of employees from the IT industry in South India. We conduct a descriptive study using stratified random sampling, surveying three sample companies. The structure of the study is to analyze how these five attributes positively impact employee commitment. A structured questionnaire collects data from 422 employees, which SPSS and AMOS then analyze. The main objective of the study is to understand how these five characteristics—resilience, well-being, work-life balance, self-efficacy, and work culture—impact employee commitment, which is essential for the performance of any organization and the satisfaction of employees. The results are significant and positive, which indicates these are important attributes for employee commitment.

Keywords: Work-life Balance, Employee Commitment, Resilience, Culture, Motivation
JEL Classifications:J24

1. INTRODUCTION

In the modern age, each individual organizes their life plan to be a committed and loyal employee to the organization, where they are bound by the contract of employment. Countless studies indicated that, firstly, there is a significant relationship between several components and employee commitment. Secondly, self-efficacy mediates corporate cultural factors and organizational commitment; thirdly, organizational communication, training, development, and reward recognition are the major driving components that influence employee commitment (Soomro et al., 2023). Organizational culture factors that foster commitment include transformational leadership, team integration, equitable pay, and a caring attitude (Dunger, 2023). Fourthly, self-esteem and self-awareness, job motivation, job satisfaction, and work culture also influence employee commitment in various workplaces (Permata et al., 2023; Perkasa et al., 2023). Correspondingly, company culture significantly affects employee dedication (Rifq and Sasongko, 2023), whilst employee well-being and self-efficacy act as important factors for organizational commitment (Anwar et al., 2023). Additionally, resiliency and company culture both act as major driving components for organizational commitment (Wardjianto et al., 2022). Next, training, development, reward recognition, and organizational communication are among the positive factors that influence organizational commitment (Soomro et al., 2023).

This Journal is licensed under a Creative Commons Attribution 4.0 International License

Furthermore, leadership styles in the workplace greatly influence employee dedication. Self-efficacy mediates employee commitment from job satisfaction (Nanjundeswaraswamy et al., 2023; Perkasa et al., 2023b). Correspondingly, self-efficacy drives both organizational performance and the commitment of the employees (Fu'adah et al., 2023). Finally, motivation, counselling, coaching, and friendship enhance self-efficacy. Psychosocial support shows a linkage to self-efficacy (Distor and Nunez, 2023). Individuals who work with high self-efficacy tend to show improved performance and sustain their work commitment (Indriyaningrum and Fauzan, 2023).

2. THEORETICAL BACKGROUND

2.1. Resilience

Researchers from a variety of academic disciplines have studied resilience as an imperative. Individuals can build resilience, enabling them to overcome obstacles, by coping with and enduring challenging experiences (Mujjuni et al., 2021). Individuals who are willing to overcome challenges through dedication and self-determination can cultivate resilience (Riquelme et al., 2022b). Building close relationships with students and teaching more effectively are two of the most significant roles of educational institutions in the resilience process (Suslovic and Lett, 2023). However, the emerging idea of resilience as a therapeutic concept to promote mental health, reflecting its extensive usage as a metaphor, puts pressure on marginalized communities; it shifts the responsibility of adjustment to the humiliated individuals rather than addressing established structural problems (Akçin, 2023). This shift in roles can exacerbate existing problems. Research shows a significant interaction between resilience and individual engagement. Studies proved that employees' resilience acts as a mediator between resilience-promotion human resource practices and organizational commitment and job satisfaction (Grygorenko and Naydonova, 2023). Furthermore, research has found that psychological resilience represents an effective moderator of job instability effects on employees' organizational commitment and intention-to-quit attitudes (Samo et al., 2021). Similarly, employees' resilience further mediates the relationship between their perceived HR digitalization and positive employee outcomes like work effort and affective commitment (Baykara and Kantur, 2022). Also, findings reveal a significant association between resilience and factors closely associated with subjective well-being, such as emotional balance and life satisfaction, which act positively on organizational commitment (Wardjianto et al., 2022). These studies emphasize the crucial connection between cultivating employee resilience and enhancing organizational dedication and well-being. The psychohistorian approach on resilience narrates that adjustment and recuperation is a dynamic and evolving process that enables individuals and disciplined societies to function and advance in the face of adversities: resilience is not a constant individual attribute; instead, it emerges during the whole developmental process (Angela and Rojuaniah, 2022; Saravanan & Kumar, 2022).

2.2. Work Culture

Many studies were carried about on work culture in IT organisations and it's impacts on productivity, it's course, and the values and attitudes that existed inside that organization. It is shown in these studies the factors that influence the work culture in an organization are communication, motivation, empowerment, leadership and its core values. By the study, the positivity in employee's attitudes inwardly towards their job and the organization was positive and steadily rising (Shamsudin and Velmurugan, 2023; Gayathri and Anand, 2021). Information technology professionals worldwide sustain occupational values such as autonomy in making decisions, structure of the workplace and clarity in communication, innovation in technology, respect for technical expertise, and workers' satisfaction at the workplace (Prabhu et al., 2022 and Kumar & Das, 2023) In contrast information technology sector majorly studies the different types of human resources management with prime focus on infrastructure and facilities provided, salaries and perks, hustling between work and family life, with a rising number of reports of mistreatment by managers, rudeness and discourtesy from co-workers and gender-based discrimination too (Jackson et al., 2022; Vijh et al., 2022). Workers' commitment is mainly influenced by organizational culture (Larasati et al., 2023). In addition, the commitments of employees toward the organization become of prime importance in determining their survival and performance (Perkasa et al., 2023). Employees' commitment to a specific organization can be influenced by a variety of factors such as work-family culture, work motivation, work discipline, communication climate, as well as the quality of human resources and the dimensions of citizenship in the organization. In addition, implementing a work-family culture that is supportive as well as improving the workplace culture and communication climate will carry the support of employees in the workplace. Providing and developing commitment in employees can be achieved with the increase in the level of the positive work culture which is nurturing and developing a culture climate of employee satisfaction, motivation, and discipline (Suherdi and Ahmad, 2023; Mudhar et al, 2023).

2.3. Self-efficacy

There has been some investigation into self-efficacy in various contexts for information technology companies, such as software engineering and information systems security. Research suggests that self-efficacy impacts a variety of variables such as performance, satisfaction, and motivation (Ribeiro et al., 2023; Singh, 2021). Researchers have also identified behavioral indicators of self-efficacy in the context of software development and noted associated circumstances that can either boost or lower self-efficacy (Sembiring et al., 2023). We also considered work-life balance, culture, and communication as additional factors that self-efficacy in software development teams could potentially impact. Similarly, researchers found that self-efficacy significantly predicts the adoption of information security innovations. Individuals who have higher confidence in their abilities to apprehend and confront threats to information security display a willingness to implement IS security innovations (Septiandika & Astutik, 2023). Thus, having an understanding and fostering of self-efficacy within information technology companies could not only enhance employee performance but could also facilitate readiness in acceptance of innovative practices (Hameed and Arachchilage, 2021; Islaha & Kadyiono, 2023).

2.4. Work-life Balance

The COVID-19 pandemic in the context of the lockdown situation was a significant turning point in IT company's work-life balance in terms of employees that more remote working leads to higher psychological distress because of the employer productivity expectations. Female employees faced significant job pressure to balance both their personal and professional responsibilities, thereby maintaining their work-life balance (Srilatha and Akula, 2023). When spouses provide more emotional support, it lowers the relational costs for female employees and helps them balance their lives, leading to higher organizational commitment (Dal et al., 2020). This helped to survive individual, highly emotional days, such as childbirth or death, and the employees were fed up with the daily jobs and getting drained psychologically (Šiarnik et al., 2021). In addition, the relational cost of group travel will help millennial employees maintain their work-life balance (Soundarapandian et al., 2022; Singh, Gandhi, & Belsare, 2022). Furthermore, remote work, increased communication, work lengthening, work permeability, and work flexibility were the key factors affecting work-life balance, which increased the chances of having conflicts with both personal and professional life (Raja & Soundarapandian, 2022).

Work-life balance and employee commitment in IT companies are closely interlinked. Supervisor support, work satisfaction, and organizational commitment have a strong and positive influence on performance (Jessica et al., 2023). The main influencing factors for work-life balance are pandemic transformation and remote working, which put an enormous amount of strain and created psychological distress on the working employees, and they were not able to achieve their balance in life (Mehjubin and Jaya, 2023). HR policies that introduce an effective methodology to improve IT women's (the female workforce in the IT sector) work-life balance are suggested (Rani and Priya, 2022). Work satisfaction and organizational commitment helped achieve the aim of work-life balance (Engelen et al., 2023). Enabling a good work-life balance is a significant method for improving the productivity, mental health, and efficient working of employees in the IT sector .

2.5. Employee Well Being

Employee well-being must focus on physical and psychological dimensions but also the social, financial, and spiritual factors that enhance the employee's engagement and productivity (Rajashekar and Jain, 2022; Monteiro and Joseph, 2022; Lado et al., 2023). Many IT companies are becoming aware of and are implementing supportive programs. However, there has been less focus on finance or well-being (Prakash and Hawaldar, 2023). Researchers have observed that financial well-being significantly predicts employees' overall well-being and work performance (Langove et al., 2023). Other job stressors, such as time pressure, responsibility pressure, role conflict, inadequate rewards, and unclear roles, directly affect employees' well-being and indirectly increase turnover (Purandare, 2022). The companies prefer to focus on employee well-being, and they are implementing tailor-made programs that will eventually help the company retain employees and reduce the cost of recruitment. In the IT industry, well-being practices have become a pivotal strategy for acquiring and retaining talent, and there is a strong positive relationship between employee well-being and organizational commitment. Gen X and Gen Y employees are more concerned about subjective well-being, such as job satisfaction, and this subjective well-being positively influences commitment (Pertiwi et al., 2023). The retention factors that influence the commitment include benefits, promotion, communication, work in nature, coworkers, and normative commitment (Gelencsér et al., 2023). Economic stress during the COVID-19 pandemic harms psychological well-being and economic commitment (Martin, 2023; Lado 2023). Self-perceived status moderated the relationship between HR performance attribution and affective commitment (Kim, 2022).

2.6. Employee Commitment

Multiple factors determine the commitment of IT employees to their work. Tables show that competency, including knowledge, skill, and attitudes, affects performance and commitment (Vijh et al., 2022). Commitment to an organization, especially in the low-dynamism industries, helps improve job satisfaction and work-life balance (Engelen et al., 2022). Employee innovation positivity correlates with an organization's culture, including mission, flexibility, and wellness (Nguyen et al., 2019). Effective human resource management, for instance, determines commitment in a South African IT company (Setsena et al., 2021). Additionally, IT use, structure, IT infrastructure, and knowledge management influence a sector in Sri Lanka's aviation and airports industry (Abeyrathna et al., 2019b; Zaabi, Singh, & Ajmal, 2017).

Committed employees have a positive impact on the performance of an organization. They exhibit higher levels of productivity and dedication (Sujendran, 2023; Haya and Toker, 2022). Employee commitment correlates with satisfaction and motivation at work, as well as with an increased chance of becoming an entrepreneur (Stackhouse et al., 2022) Committed employees contribute significantly to an organization's success by demonstrating heightened awareness of product quality, high productivity, proactive problem-solving, and a willingness to exceed expectations. Decision-making at every level should also involve employees, with management showing a higher degree of openness and transparency. In addition, organizational systems should encourage employees to speak their minds, praise rather than punish, and promote a work culture that incorporates open discussions to boost commitment. Training employees and managers on commitment and psychological motions to make them more involved in job activities can motivate them. Giving them recognition and praise for positive behavior also enhances their commitment and reduces the chances of turnover management should nurture an employee's commitment to create a successful organization. (Utomo et al., 2023).

2.7. Need of the Study

This study examines the interconnected relationship between resilience, well-being, work-life balance, and work culture in IT organizations and their collective impact on employee commitment (Figure 1). One's ability to adapt, recover, and maintain psychological hardiness to endure unfavorable circumstances in the workplace is known as resilience. Employee resilience also impacts their dedication and performance. In our view, a high-resilience employee is considered a loyal, dedicated, and

productive one. The concept of well-being is another area of interest, which encompasses physical and mental well-being and its relevance to the workplace, in particular a stressful IT work environment in which late nights, long working hours, and compulsory overtime are the norm. Well-being entails excellent health, particularly mental health, and it is an important element that contributes to the overall well-being of an individual. The goal is to keep employees satisfied in their jobs, which will encourage them to stay and contribute to the growth of the organization. Work-life balance is a major concern in the IT industry due to the often demanding and exhausting nature of work, and the sometimes difficult transitions between work and personal life, which can lead to feelings of burnout and stress. Understanding how work-life balance strategies in IT organizations impact employee commitment may provide insights into garnering support and maintaining high-performing employees. Work culture plays a crucial role, encompassing a variety of attitudes, values, goals, and practices that foster collaboration, embody the positive energy of rewarding work, and significantly influence employee commitment within the workplace. We have chosen to focus our study about high turnover and the highly competitive nature of the IT industry with organizational insights into creating a compelling working environment that would appeal to individuals and encourage them to stay with their organizations.

2.7.1. Hypothesis of the research

- Hypothesis 1 (H_1): Resilience positively influences employee Commitment
- Hypothesis 2 (H_2): Work life balance positively influences Employee Commitment
- Hypothesis 3 (H_3): Work culture positively influences Employee Commitment
- Hypothesis 4 (H_4): Self Efficacy positively influences Employee Commitment
- Hypothesis 5 (H_5): Employee well-being positively influences employee commitment.

3. METHODOLOGIES

The study methodology seeks to understand the perspectives of professionals in the Information Technology (IT) sector in South India. It employs a quantitative approach, collecting data from a sample of 422 individuals through stratified random sampling. This technique ensures accurate and representative responses from various subcategories of the IT sector, thereby enhancing the applicability of the results. The instrument for collecting primary data is a structured questionnaire. It is formed by two sections. The first section, which consists of five questions, collects information about the respondents' demographics, including age, gender, higher education, degree, working year, professionalism, and organization. The second section of the structured questionnaire consists of 37 questions on a Likert scale, designed to assess attitudes, perceptions, and experiences deemed significant in the field of information technology image. We assured the participants involved in this research that their personal information would remain confidential. We achieved informed consent from all the participants. We use the Likert scale questions to elicit subtle and nuanced perceptions, opinions, and attitudes regarding the information technology sector. We used the statistical analysis of these two types of questions—the mean, median, and mode—to determine the central tendency of the answers and to measure their variability with the standard deviation. This approach permits comprehension of the current trends and attitudes in South Indian IT companies.

4. DATA ANALYSIS

4.1. Demographic Analysis

Table 1 reveals that young individuals make up the majority of IT organization employees. The proportion of individuals within the age ranges of 18-25 and 26-33 is 46.0% and 30.8%, respectively, indicating that the information technology industry is a youthful one, eager to adopt the latest technological trends. The gender data reveals that the proportion of married individuals is only slightly higher than that of unmarried individuals (56.6% and 43.4%, respectively), indicating the varying stages of life that can influence society and people's lifestyles. The education composition of IT's employees is very high. 55.7% of people have a graduate degree, and 29.6% hold a postgraduate degree. This explains the high number of engineers, scientists, and IT professionals in the workforce. Now, we will discuss the annual income of IT's employees. In proportion, 50.5% of people earn between rupees 20,001 and rupees 50,000 per month, but that's not the only salary range. A significant number, 22.5% of the employees, have a salary of less than rupees 20,001, while another portion (7.8%) also holds a salary of more than rupees 100,000 per month. This demonstrates that there are people with different financial statuses. Offering technical expertise and services, along with the invention of new products, necessitates a workforce that has experience. Thus, the work experience of employees in IT organizations is discussed. The chart's statistical demonstration reveals that 42.4% of the workforce comprises professionals

Table 1: Demographic characteristics

Variable	n=422	Percent
Age		
Below 25 years	194	46.0
26-33 years	130	30.8
34-41 years	61	14.5
42-49 years	29	6.9
above 50 years	8	1.9
Marital status		
Married	183	43.4
Unmarried	239	56.6
Qualification		
Diploma	62	14.7
Graduate	235	55.7
Postgraduate	125	29.6
Monthly income		
<Rs 20,000	95	22.5
Rs. 20,001-Rs. 50,000	213	50.5
Rs. 50,001-Rs. 1 Lakh	81	19.2
Above 1 Lakh	33	7.8
Experience		
<2 years	70	16.6
2-5 years	52	12.3
5-10 years	179	42.4
10-20 years	65	15.4
>20 years	56	13.3

with 5-10 years of experience. The next portion is made up of individuals with less experience. These individuals have <2 years of experience, and 13.3% have a little over 20 years of experience.

4.2. Exploratory Factor Analysis

The exploratory factor analysis (EFA) in SPSS, as shown in Table 2, demonstrates the underlying causes affecting the observed data. The first step in this process is assessing the preliminary applicability of the data in terms of the KMO measure (the Kaiser-Meyer-Olkin criterion is sample size adequacy) and Bartlett's test of sphericity, which is a statistical test to measure the preparation of variables for factor analysis. We observed factor loadings in the output and grouped variables with high loadings on the same factor (Figure 2). We interpret the factors based on their loading patterns and assign names that typically convey their meaning. Exploratory factor analysis (EFA) reduces the complexity of data, which makes the correlations between variables simple to interpret. The final decision to choose the model prioritizes the interpretation of the factors over the eigenvalues.

To test the null hypothesis that the correlation matrix is an identity matrix, and hence that the variables are not correlated and not suitable for factor analysis, we use Bartlett's Test of Sphericity. For this case, the result is 3029.868 for the estimated Chi-square value with 231 degrees of freedom, and Sig. of 0.000.The study has a high level of significance, as its P-value is lower than 0.05. Therefore, we can reject the null hypothesis that the variables are independent and accept the suitability of component analysis, although the KMO example above was fairly impressive. In conclusion, when we have a high KMO value along with a significant Bartlett's Test for Sphericity, the data is suitable for factor analysis.

Obtained from factor analysis, this table shows which items (RES1-RES3, WLB1-WLB3, WCU1-WCU4, SEF1-SEF4, EWB1-EWB4, ECO1-ECO4) load onto which of the six separate components or factors. Rotation is useful because it helps in finding the best structure, which would be easier to understand. A more straightforward structure has maximum squared loadings of the variables to any given factor. RES1, RES2, and RES3 are loaded on Component 3 with significant loadings above 0.85. So we can conclude that RES1, RES2, and RES3 have a high association with Component 3 and are most likely measuring features of resilience. WLB1, WLB2, and WLB3 are strongly associated with Component 4; its loading is above the threshold of 0.675. Therefore, we can conclude that it has a strong association with the concept of work-life balance. WCU1 to WCU4 exhibit significant loadings on the first component, suggesting that these four questions are likely related to work culture. The cluster of SEF1-SEF4 also exhibits significant loading on the 5th component, suggesting that these SEF questions are primarily measuring self-efficacy. The question cluster EWB1-EWB4 falls on the 6th component, which pertains to employee well-being. The question cluster ECO1-ECO4 exhibits a strong correlation with component 2, likely reflecting an employee's complete dedication to their job. The semimatrix plot reveals that factor analysis has identified several underlying constructs within the dataset, providing a systematic view of how different item clusters relate to each other.

Table 2: Exploratory factor analysis

KMO and Bartlett's test		
Kaiser-Meyer-Olkin Measure of Sampling Adequacy.		0.769
Bartlett's Test of Sphericity	Approx. Chi-square	3029.868
	df	231
	Sig.	0.000

4.3. Measurement Model

We established links between observed variables and their latent constructs using the AMOS Measurement Model. In the process, we construct a path diagram that connects observed variables to their latent constructs. We interpret the data by evaluating the goodness of model fit, such as the CFI and RMSEA indices, and examining the strength of factor loadings, which indicate the degree of association between variables and factors. High loading means a strong connection between a variable and a latent factor. We assess the fit index based on the quality of the model fit. High values of fit indices indicate a well-conceptualized model that reflects its underlying structure data (Henseler et al., 2014).

4.4. Model Fit Statistics

We then assessed the Table 3 model fit statistics, utilizing AMOS to validate the conceptual model. As part of the confirmatory factor analysis, we tested the factor loadings for every item; we had to remove some items LD1, TA2, TR1, OP1, and CM1 as their AVE was low and as well as factor loadings (0.50) were not in the suggested level. The model's overall goodness of fit was assessed using model-fit metrics, and all values were within the recommended threshold levels (Ullman, 2001; Hu and Bentler, 1999). The five-factor model fits the data well.

Table 3 assesses the measurement models, utilizing AMOS for confirmatory factor analysis (CFA). As part of the confirmatory factor analysis, we tested the factor loadings for every item; we removed all items LD1, TA2, TR1, OP1, and CM1 due to their low factor loadings (0.50). We assessed the overall goodness of fit of the model using model-fit metrics, and all values fell within their respective common acceptability levels (Ullman, 2001; Hu and Bentler, 1999). The five-factor model fits we assumed that the measurement model analysis, a standard procedure for SEM analysis, would check the reliability and validity of the scale. The constructs used in the study reach a Cronbach's alpha value above the recommended factor of 0.7 (Fornell and Larcker, 1981). Table 4 highlighted the model fit evaluation. We conducted the confirmatory factor analysis (CFA) using AMOS to evaluate the measurement models. We accessed the factor loadings for each item during the CFA. The model-fit measures were considered to assess the model's fit with the data, and all the values are in their respective common

Table 3: Cross Loading Assessment for quality criteria of the constructs

Measure	Estimate	Threshold
CMIN	248.422	-
DF	194	-
CMIN/DF	1.281	Between 1 and 3
CFI	0.981	>0.95
SRMR	0.043	<0.08
RMSEA	0.026	<0.06
Close	0.100	>0.05

acceptance range (Ullman, 2001; Hu and Bentler, 1998; Bentler, 1990). The five-factor model was a satisfactory fit for the data. We used the criteria of Hair et al. (2010) to explore the relationships through an AMOS-generated structural equation model (Figure 3). "If the CMIN/df value is at least 0.90, the GFI indicator, the Tucker and Lewis (1973) index (TLI), and the Confirmatory Fit index (CFI) (Bentler, 1990) values are all at least 0.90, and the RMSEA value falls between 0.05 and 0.08, then the structural model is considered well-fitting." In the following table, it is clear that the fit indices of the model are within the admissible confines.

Then correlations were tested using a structural equation model generated via AMOS. Hair et al. (2010) deemed a model to be adequately fitting if the CMIN/df value, the GFI indicator (goodness of fit index), the Tucker and Lewis index (TLI), and the Confirmatory Fit index (CFI) (Bentler, 1990) were all greater than or equal to 0.90. Hair et al. (2010) also accept a model as good functioning if the RMSEA (root mean square error approximation) falls within the range of 0.05-0.08. The RMSEA was found to be 0.054, while the other fit indices were within acceptable ranges.

Table 5 shows the values of Cronbach's alpha and composite reliability. They are used to validate the construct's dependability. Calculation of Cronbach Alpha of the scale's constructs found that all of them were higher than the acceptable minimum of 0.70 according to Nunnally and Bernstein (1994). Moreover, above 0.70 all composite reliabilities ranged between 0.814 and 0.868 (Hair et al., 2010). As a result, each of the study's construct's construct dependability has been specified successfully. This will be helpful to our research. Furthermore, the Average Variance Explained was the means of the scale's item convergent validity Fornell and Larcker criterion (Fornell and Larcker, 1981). As presented in the table above, all of the Average Retrieved Variance values are above the cut-off of 0.50. Indeed, the scales of this current study have acceptable convergent validity. Additionally, for the current study for the discriminant validity Table 5 shows the values of the Heterotrait-Monotrait Ratio and Fornell and Larcker criterion. The first criterion was used to check out the heterotrait-monotrait ratio. According to the table above, all the ratios are below the acceptable minimum of 0.85.

5. FINDINGS FROM THE STUDY

According to the above Table 6 above, the employees with resilience surely have a positive impact on employee commitment ($\beta = 0.182$, $P = 0.003$), because resilient employees' commitment is high. Naturally,

Table 4: Cross Loading Assessment for quality criteria of the constructs

Items	Constructs					
	WCU	ECO	RES	SEF	EWB	WLB
RES1			0.858			
RES2			0.875			
RES3			0.866			
WLB1						0.784
WLB2						0.675
WLB3						0.827
WCU1	0.861					
WCU2	0.858					
WCU3	0.872					
WCU4	0.861					
SEF1				0.734		
SEF2				0.752		
SEF3				0.745		
SEF4				0.714		
EWB1					0.736	
EWB2					0.747	
EWB3					0.678	
EWB4					0.701	
ECO1		0.802				
ECO2		0.795				
ECO3		0.768				
ECO4		0.789				

Table 5: Convergent, discriminant validity measures

Items	Composite reliability	Average variance extratced	Mean standard variance	Resilience	Well being	Work culture	Self efficacy	Work life balance	Employee commitment
Resilience	0.814	0.662	0.200	0.812					
Well Being	0.828	0.685	0.111	0.262**	0.813				
Work Culture	0.868	0.753	0.316	0.447***	0.239*	0.801			
Self-Efficacy	0.836	0.698	0.176	0.137	0.117	0.420***	0.779	0.0.643	
Work life balance Balance	0.806	0.642	0.316	0.336**	0.334**	0.562***	0.377***	0.783*	
Employee Commitment	0.788	0.620	0.142	0.0412	0.267	0.452	0.523	0.234	0.615

Note: CR = Composite Reliability; AVE = Average Variance Extracted; MSV = Maximum Shared Variance. Diagonal values (in bold) represent √AVE. *p < .05, **p < .01, **p < .001.

Table 6: Regression weights: (Group number 1 - default model)

Hypothesis			Estimate	S.E.	C.R.	P	Label
ECM	<---	RES	0.182	0.061	2.975	0.003	Supported
ECM	<---	WLB	0.239	0.090	2.662	0.008	Supported
ECM	<---	WCU	0.059	0.061	0.965	0.004	Supported
ECM	<---	SEF	0.179	0.077	-2.319	0.020	Supported
ECM	<---	EWB	0.169	0.093	1.824	0.018	Supported

Figure 1: Conceptual framework

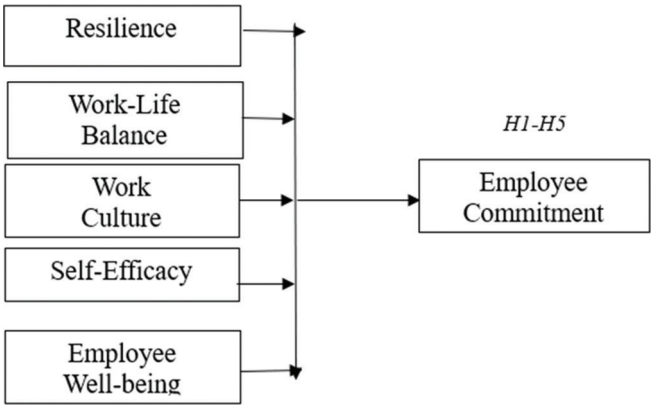

Figure 2: Measurement model

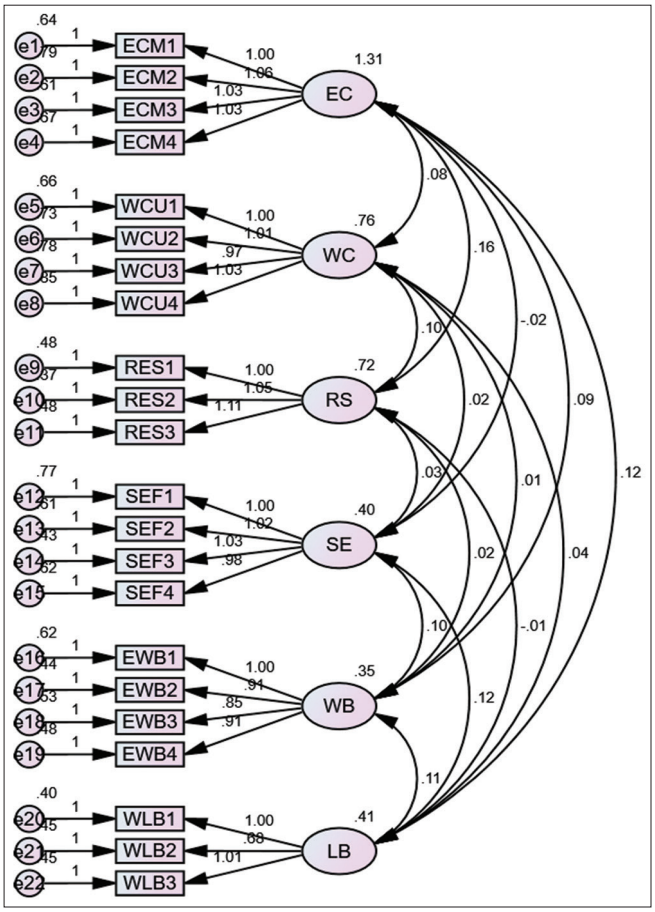

adaptability and resilience can strengthen organizational commitment (Figure 4). Work-Life Balance (WLB) positively enhances employee commitment (β = 0.239, P = 0.008). Balancing work and family life

Figure 3: Structural model

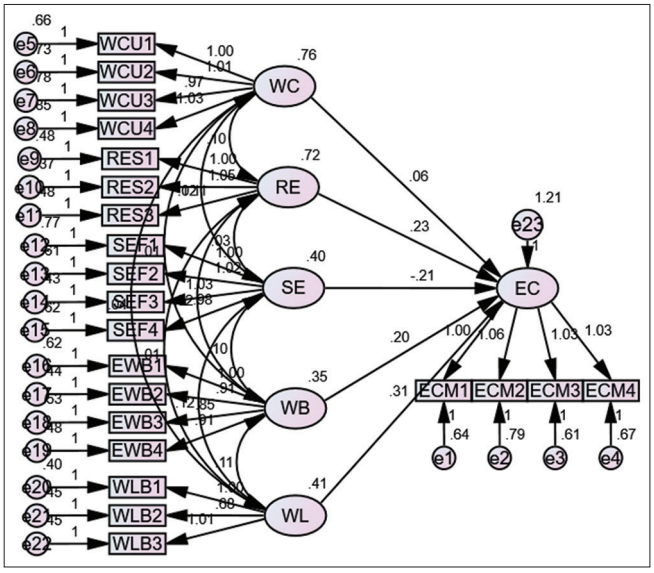

Figure 4: Path analysi

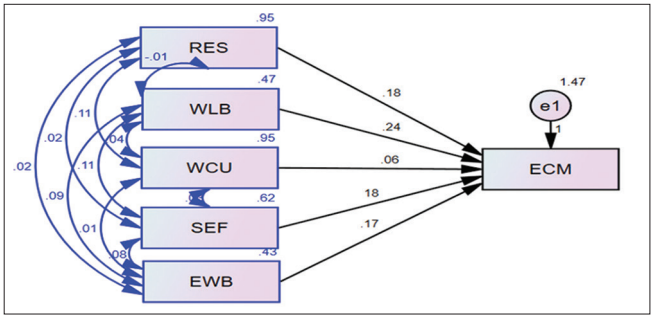

at the same time can enhance employee commitment. Particularly, when an employee perceives a balance between work and family life, they feel more committed to their enterprise. Management style exerted a positive influence on employee commitment (β = 0.059, P = 0.004). This implies that a friendly workplace can moderately enhance employee commitment. Employee commitment also had a positive influence on self-efficacy (β = 0.179, P = 0.020). This reinforces the notion that an individual's self-confidence plays a significant role in their organizational attachment, as it demonstrates that self-efficacy fosters employee commitment, aligning with the belief that an emotionally fit individual is more committed to their company than those who are less fit. It was measured as well that happiness has a positive correlation with employee commitment (β = 0.169, P = 0.018). This suggests that emotional well-being aids in the organizational adaptability of employees. On the whole, our results show that employee commitment to their employer in South Indian IT stems from both individual psychological characteristics as well as features related to the work environment. Resilience, work-life balance, work culture, self-efficacy, and emotional well-being all positively influence employee commitment and loyalty to their employer.

6. DISCUSSION AND CONCLUSIONS

Here's what budding managers can gain from this study if they're concerned with increasing employee commitment in the IT sector:

(1) Create resilience-building programs since there is a strong positive relationship between resilience and commitment. You can design and teach employees stress handling and coping programs to cultivate a workforce capable of managing stressful times. (2) Delineate and enforce a corporate policy of work-life balance. Many organizations express desirable intentions when it comes to protecting work-life balance but do not have formal structures to enforce these policies. (3) Encourage positivity, inclusivity, and employee support. These predictors have a significant positive effect on commitment, although their influence is low to moderate. The workplace should be more positive and nurturing, inclusive of various voices, supportive of employees, and have a positive and considerate leadership style. To achieve this, we can implement policies like encouraging certain employees to participate in the company's diversity club and executive sessions, which aim to plan the future of the operation. (4) Create opportunities to make the employees feel empowered to enhance their self-efficacy. Remember that there is a significant positive relationship between employees' commitment and self-efficacy. This could be done by managers allowing more opportunities for employees to hone their competencies, assigning assignments of realistic difficulty, encouraging creative thinking, engaging in two-way communications, rewarding them for hard work, and acknowledging their effort. (5) Mental health and emotional support play a crucial role in fostering employee commitment. Organizational activities should prioritize enhancing the mental health and emotional support of their employees. That's why I've encouraged organizations to implement more programs aimed at enhancing mental health, launch a stress-busting campaign, and engage in more activities that promote a wellness culture among their employees. This set of steps, if taken by managers, can increase employee engagement and positively affect their happiness and output. This has implications for employee retention and return rates, decision-making, and productivity. It can lead to better performance during times of technology disruption, generate more profits, please external stakeholders, and gain a competitive advantage in the turbulent IT sector.

7. SCOPE FOR FURTHER STUDY

This study is a perfect example of a creative way of exploring influences on later employee commitment. Future studies on this topic can incorporate additional features, contexts, and settings to enhance our understanding. Extending this model could test the mediating role and the moderating role of some other key variables. We could examine the mediating role of organizational support and leadership style in the relationship between these observed variables and employee commitment to gain a deeper understanding and better insights. However, we should note that these relationships may not operate in the same way for different employee characteristics. For instance, we could investigate the role of possible influential moderators, such as gender, age, or tenure, based on the potential differences in the impact of the observed variables on employee commitment. The researcher limited this study to only South India for convenience, but extending the geographical range to other parts of the country, preferably to nations other than India, could test the effect of culture on these associations. This could be especially crucial for examining cross-cultural differences, given that the IT sector is a global one. It would add to the generalizability of the findings of this research if the effects of various personality and individual differences (e.g., balancing disclosure needs in the workplace with privacy concerns) were also considered. The theoretical aspect of this analysis focused on the relationship between the variables observed at a single point in time, utilizing a cross-sectional design. This may not be sufficient, as the relationships might change with time. Longitudinal research could track the levels of these variables for participants at different points in time to understand the changing nature of the relationships and their impact on employee commitment. Given the reported effects of technical developments and digitalization in the IT sector, future studies could explore the effects of these phenomena, which were not examined in this study, to better understand their dynamics, nature, and impact on employee experience and commitment in the IT sector.

REFERENCES

Abeyrathna, A.G.G.S., Tissera, P.V.S., Rajapakshe, W. (2019b), Usage of information technology on employee commitment: Airport and aviation industry in Sri Lanka (AASL). Asian Journal of Economics Business and Accounting, 10, 1-15.

Akçin, K. (2023), The mediating effect of psychological resilience in the impact of increasing job insecurity with the pandemic, on organizational commitment and turnover intention. Kybernetes, 52(7), 2416-2430.

Angela, J., Rojuaniah, R. (2022), The model of supervisor support, Work-Life balance, job satisfaction, and organizational commitment on IT employee performance moderated by demographic factors. Jurnal Manajemen Indonesia, 22(3), 314.

Anwar, S., Abdelwahed, N. A. A., Soomro, B. A., Zehri, A. W., Shah, N. (2023), Employee well-being and self-efficacy as predictors of organizational commitment: Evidence from the IT sector. Research and Management Sciences Studies, 5(2), 110-125.

Bentler, P. M. (1990), Comparative fit indexes in structural models. Psychological Bulletin, 107(2), 238-246.

Dal, S., Akgunduz, Y. (2020), The effect of employee advocacy and perceived organizational support on job embeddedness and turnover intention in hotels. Journal of Hospitality and Tourism Management, 43, 253-262.

Baykara, R., Kantur, D. (2022), Resilience as a moderator between perceived HR digitalization and positive employee outcomes. In: Advances in Logistics, Operations, and Management Science Book Series. United States: IGI Global, p187-213.

Distor, J.M.S., Nunez, E. (2023), Ntoring functions to self-efficacy and organizational commitment. Diversitas Journal, 8(3), 2678.

Dunger, S. (2023), Culture meets commitment: How organizational culture influences affective commitment. International Journal of Organization Theory and Behavior, 26(1/2), 41-60.

Engelen, A., Rieger, V., Wehner, M., Heidemann, F. (2022), Is organizational commitment to IT good for employees? The role of industry dynamism and concentration. MIS Quarterly, 46(4), 2387-2404.

Fornell, C., Larcker, D. F. (1981), Evaluating structural equation models with unobservable variables and measurement error. Journal of Marketing Research, 18(1), 39-50.

Fu'adah, T., Afidah, A., Akbar, M.R.I., Jumiati, M., Putra, R.S. (2023), Systematic literature review: Analysis of the impact of self-efficacy application on assessment of organizational commitment

and employee performance at PT. Samudera Perdana Selaras. Greenomika, 5(1), 68-76.

Gayathri, M., Anand, J. (2021), A study on organizational work culture in information technology industry. Shanlax International Journal of Arts Science and Humanities, 8(3), 131-136.

Gelencsér, M., Szabó-Szentgróti, G., Kőmüves, Z.S., Hollósy-Vadász, G. (2023), The holistic model of labour retention: The impact of workplace wellbeing factors on employee retention. Administrative Sciences, 13(5), 121.

Grygorenko, Z., Naydonova, G. (2023), The concept of "resilience": History of formation and approaches to definition. Public Administration and Law Review, 2, 76-88.

Hair, J.F., Black, W.C., Babin, B.J., Anderson, R.E. (2010), Multivariate Data Analysis. 7th ed. New York: Pearson.

Hameed, M.A., Arachchilage, N.A.G. (2021b), The role of self-efficacy on the adoption of information systems security innovations: A meta-analysis assessment. Personal and Ubiquitous Computing, 25(5), 911-925.

Haya, A. M., Toker, A. (2022), Importance of employee motivation and commitment on innovative behaviors. Eurasian Journal of Management & Social Sciences, 3(1), 70-79.

Henseler, J., Ringle, C.M., Sarstedt, M. (2014), A new criterion for assessing discriminant validity in variance-based structural equation modeling. Journal of the Academy of Marketing Science, 43(1), 115-135.

Hu, L., Bentler, P.M. (1999), Cutoff criteria for fit indexes in covariance structure analysis: Conventional criteria versus new alternatives. Structural Equation Modeling a Multidisciplinary Journal, 6(1), 1-55.

Indriyaningrum, K., Fauzan, M. (2023), The effect of self-efficacy, interpersonal communication and work ethics on sustainable work commitment. JENIUS (Jurnal Ilmiah Manajemen Sumber Daya Manusia), 6(3), 437.

Islaha, S., Kadiyono, A.L. (2023), The effect of organizational well-being on organizational commitment in telecommunication employees. Psikostudia: Jurnal Psikologi, 12(2), 224-230.

Jackson, D., Shan, H., Meek, S. (2022), Employer development of professional capabilities among early career workers and implications for the design of work-based learning. The International Journal of Management Education, 20(3), 100692.

Jessica, N., Afifah, N & Daud, I., Sulistiowati and Wenny, P. (2023), The effect of work environment and work-life balance on job satisfaction: Work stress as a mediator. Journal of Economics Management and Trade. 29(1), 54-65.

Kim, J., Koo, B. (2022), Self-perceived status moderates the relationship between HR performance attribution and affective commitment. European Journal of Training and Development, 45, 793-808.

Kumar, I.V., Das, V.T. (2023), Women employees work life balance in new normal- A study on select IT companies in Bangalore. EPRA International Journal of Economic and Business Review, 11(3), 2012.

Lado, M., Alonso, P., Cuadrado, D., Otero, I., Martínez, A. (2023), Economic stress, employee commitment, and subjective well-being. Journal of Work and Organizational Psychology, 39(1), 7-12.

Langove, N., Javaid, M.U., Ayyasamy, R.K., Ibikunle, A.K., Sabir, A.A. (2023), Job stressors and turnover intention of IT executives in Malaysia: The mediating role of employee well-being. Work, 77(1), 295-305.

Larasati, D., Salendu, A., Etikariena, A. (2023), Work-family culture dan organizational commitment Karyawan Wanita: Work-life balance sebagai mediator. Persona Jurnal Psikologi Indonesia, 11(2), 213-230.

Lado, M., Alonso, P., Cuadrado, D., Otero, I & Martinez, A. (2023). Economic Stress, Employee Commitment, and Subjective Well-Being. Journal of Work and Organizational Psychology. 39(1), 7-12.

Mehjebin.M., Chitranshi, J. (2022). Work-life balance among the IT professionals during Covid-19. Cardiometry, 25, 725-729.

Mudhar, Y. M. (2023), The impact of work culture on employee commitment: A study of selected IT companies (Master's thesis, University of Jyväskylä). Finland: University of Jyväskylä Repository.

Monteiro, E., Joseph, J. (2022), Establishing healthy workplaces: A case study on the employee well-being initiatives in the IT sector. International Journal of Case Studies in Business IT and Education, 6, 378-392.

Mujjuni, F., Betts, T., To, L., Blanchard, R. (2021), Resilience a means to development: A resilience assessment framework and a catalogue of indicators. Renewable and Sustainable Energy Reviews, 152, 111684.

Nanjundeswaraswamy, T.S., Nagesh, P., Bharath, S., Vignesh, K.M. (2023), The mediating role of self-efficacy in the relationship between job satisfaction and commitment of employees working in the textile industry. Research Journal of Textile and Apparel, 28, 1031-1050.

Nguyen, V., Siengthai, S., Swierczek, F., Bamel, U.K. (2019), The effects of organizational culture and commitment on employee innovation: Evidence from Vietnam's IT industry. Journal of Asia Business Studies, 13(4), 719-742.

Nunnally, J.C., Bernstein, I.H. (1994), The Assessment of Reliability. Psychometric Theory, 3, 248-292

Perkasa, A.D.H., Susiang, M.I.N., Rostina, C.R., Parashakti, R.D., Purwanto, S. (2023), The influence of work culture, work motivation, and job satisfaction on the organizational commitment of administrative personnel members of the PKS faction of the house of representatives of the republic of Indonesia. Knowledge E Social Sciences, 4(1), 22-30.

Permata, A. D. H., Susiang, M. I. N., Rostina, C. R., Parashakti, R. D., Purwanto, S. (2023), Job performance evaluation through affective commitment and justice perceptions. Journal of Public University of Halu Oleo, 7(1), 22-30.

Pertiwi, M., Pratiwi, A.M.A., Agitama, A., Ardiansah, B.A., Suryanti, S.A. (2023), Pengaruh subjective well being terhadap komitmen organisasi pada karyawan gen X Dan Gen Y. Syntax Literate Jurnal Ilmiah Indonesia, 8(7), 5234-5245.

Prabhu, G., Pandey, V., Jeyavel, S., Greeshma, R. (2022), Would you mind sharing your story? A narrative exploration of incivility experiences in the Information Technology workplace. Information Technology and People, 36(3), 1160-1178.

Prakash, N., Hawaldar, A. (2023), Investigating the determinants of financial well-being: A SEM approach. Business Perspectives and Research, 12(1), 11-25.

Purandare, N.S. (2022), A comparative analysis of employee wellbeing practices implemented in information technology companies and automobile companies in Pune. Prayukti - Journal of Management Applications, 2(2), 130-134.

Raja, R.V., Soundarapandian, K. (2022), Impact of factors on work life balance due to technology transformation with respect to information technology employees. Webology, 19(1), 5487-5496.

Rajashekar, S., Jain, A. (2023), A thematic analysis on "employee engagement in IT companies from the perspective of holistic well-being initiatives." Employee Responsibilities and Rights Journal, 36(2), 165-187.

Ribeiro, J.L.D., Silva, L.M., Santos, A.F. (2023), The impact of self-efficacy on job performance in IT professionals: Evidence from Brazil. Journal of International Economics and Research, 20(6), 4832-4845.

Rani, T.J., Priya, V.K. (2022), The role of human Resource Policies on work life balance among information technology sector of women professionals. Journal of Information and Organizational Sciences, 46(1), 255-266.

Rifq, M.D.U., Sasongko, N. (2023), The effect of financial distress, leverage, profitability, and liquidity on accounting prudence. International Journal of Social Science and Economic Research, 8(5), 965-983.

Riquelme, I.M., Pons, S.B., Ramon, M.R.R. (2022), Resilience: Conceptualization and keys to its promotion in educational centers. Children, 9(8), 1183.

Samo, A.H., Shaikh, N., Ibrahim, I., Ali, A. (2021), Reap the resilience, stop wearing the worry: Exploring the role of resilience enhancing practices in organizational outcomes. Journal of Indian Business Research, 13(2), 324-340.

Saravanan, S., Kumar, V. (2022), A study on work life balance of women it employees post covid-19 pandemic. International Journal of Scientific Research in Engineering and Management, 6(5), 13079.

Sembiring, N.I.P., Dalimunthe, N.R.F., Gultom, N.P. (2023), The effect of self-esteem in organization and self-awareness on employee performance with organizational commitment as a mediation variable in Astra credit companies Medan branch. International Journal of Economic Business Accounting Agriculture Management and Sharia Administration (IJEBAS), 3(2), 581-593.

Septiandika, V., Astutik, M. (2023), Pengaruh E-service quality terhadap self-efficacy (studi Kasus Pengguna Mandiri online Di Jember, Situbondo, Probolinggo, Bondowoso, Lumajang Dan Banyuwangi). Jurnal Niara, 15(3), 581-585.

Setsena, L.N., Botha, C.T., Paul-Dachapalli, L. (2021), Relationship between organisational commitment and effectiveness of human resource management practices in a South African information technology company. SA Journal of Human Resource Management, 19, 1586.

Shamsudin, S., Velmurugan, V. (2023), A study on the drivers of corporate culture impacting employee performance in it industry. International Journal of Professional Business Review, 8(2), e01023.

Šiarnik, P., Jurík,M., Klobučníková, K., Kollár, B., Pirošová,M., Malík,M., Turčáni ,P, Sýkora, M. (2021), Sleep apnea prediction in acute ischemic stroke (SLAPS score): a derivation study. Sleep Medicine, 77, 23-28.

Singh, D., Gandhi, M., Belsare, N. (2022), Group travel influencing work-life balance of millennials: The study of IT companies in Pune. Cardiometry, 22, 297-305.

Singh, M. (2021), Study on impact of self efficacy on leadership effectiveness in IT companies. International Journal of Science and Society, 3(1), 89-98.

Soomro, B.A., Zehri, A.W., Anwar, S., Abdelwahed, N.A.A., Shah, N. (2023), Developing the relationship between corporate cultural factors and employees' organizational commitment via self-efficacy. South Asian Journal of Business Studies, 13(3), 325-347.

Srilatha, P., Akula, R. (2023), Work life balance of women employees in software industry– An analytical Study on role of spouse. International Journal of Finance Entrepreneurship and Sustainability, 3, 148.

Stackhouse, L.E., Zaman, F.M., Turner, K.W. (2022), Effect of employee commitment on organizational performance; case of textile firms in Sweden. Journal of Human Resource and Leadership, 6(2), 1-10.

Suherdi, S., Ahmad, A. (2023), The influence of organizational culture, work discipline, and organizational citizenship behavior on organizational commitment. BIMA Journal (Business Management and Accounting Journal), 4(1), 1-8.

Sujendran, N.A. (2023), Employee commitment and performance: A road to nurture organizational performance with special reference to the Eastern University, Sri Lanka. International Journal of Social Sciences and Management Review, 6(2), 231-238.

Suslovic, B., Lett, E. (2023), Resilience is an adverse event: A critical discussion of resilience theory in health services research and public health. Community Health Equity Research and Policy, 44(3), 339-343.

Tucker, L. R., Lewis, C. (1973), A reliability coefficient for maximum likelihood factor analysis. Psychometrika, 38(1), 1-10.

Ullman, J.B. (2001), Structural equation modeling. In: Tabachnick, B.G., Fidell, L.S., editors. Using Multivariate Statistics. Boston, MA: Pearson Education.

Utomo, H.J.N., Pujiastuti, E.E., Hendrayanti, G.V.P. (2023), Increasing organizational commitment through spiritual intelligence, transformational leadership, and self-efficacy. Journal of Economics, Finance and Management Studies, 6(6), 2846-2852.

Vijh, G., Sharma, R., Agrawal, S. (2022), Effect of competency on employee performance and the mediating role of commitment: An empirical investigation in the IT Industry. Journal of Information and Optimization Sciences, 43(7), 1573-1587.

Wardjianto, P., Purwana, D., Clara, E. (2022), The Influence of organizational culture on employee affective commitment to change with employee resilience and employee readiness to change as mediators. International Journal of Research and Review, 9(8), 733-748.

Zaabi, H.H.J.A., Singh, S.K., Ajmal, M.M. (2017), Role of organisational commitment, culture and leadership in managing innovation: A study. International Journal of Value Chain Management, 8(3), 270.