International Review of Management and Marketing

ISSN: 2146-4405

available at http: www.econjournals.com

International Review of Management and Marketing, 2024, 14(5), 222-234.

Moderating role of Digital Consumer Protection in Impacting the Intention to Use Digital Financial Services

Pushpkiran Singh[1]*, Tejas Dave[1], Ashish B. Joshi[2]

Pandit Deendayal Energy University, Gandhinagar, Gujarat, India, [2]VGES Campus Chandkheda, Ahmedabad, Gujarat, India.
*Email: singhpushpkiran@gmail.com

Received: 10 May 2024 **Accepted:** 16 August 2024 **DOI:** https://doi.org/10.32479/irmm.16842

ABSTRACT

Digital finance has the potential to increase financial services accessibility and financial inclusion of the people in need. Digital Financial Services encompass a range of financial services that are accessible and utilized via digital platforms, including lending, payments, insurance, and eventually personal finance management. In addition to more contemporary financial solutions like digital lending platforms, crowdfunding platforms, peer-to-peer (P2P) lending, digital payments, e-commerce, mobile wallets, and app-based lending, digital financial services also include more traditional financial solutions like credit and debit cards, and point of sale (PoS) systems. The moderating role of digital consumer protection in impacting the association between the five variables usability of services, facilitating conditions of the consumers, usage experience, trust and technology self-efficacy of the customers and the consumers' intention to use digital financial services has been investigated in this research. Data has been collected from 528 people of Gujarat, India, belonging to the middle- and higher-income groups through random sampling technique. A structured equation modelling approach has been adapted and the test of the model developed makes it clear that digital consumer protection moderates the relationship between technology self-efficacy of consumers and their intention to use digital financial services. Similarly, it also moderates the relationship between the usability of financial services and intention to use digital financial services. However, it does not moderate relationship between facilitating conditions, usage experience, trust and consumers' intention to use digital financial services.

Keywords: Digital Consumer Protection, Usability, Usage experience, Trust, Digital Financial Inclusion
JEL Classifications: D14, D18, G28, O33

1. INTRODUCTION

Financial services accessed through mobile phones and the internet have played a significant role in recent progress in digital financial services. The concept of financial inclusion refers to the assurance that low-income and vulnerable individuals have access to appropriate, affordable, and accessible financial products and services in a fair, sustainable, and transparent manner. With the implementation of block chain technology, decentralized digital currencies have drawn quite a bit of attention in the tech and financial community, and their potential to empower financial inclusion is being tested in different parts of the world. There is an optimistic that block-chain technology will help standardize financial transactions and make banking more accessible (Lichtfous et al., 2019). Since their inception, block-chain technologies have demonstrated a great deal of promise for institutionalizing remittances and expanding access to financial services.

The Indian government has implemented various measures to increase financial inclusion by establishing a digital basis. The introduction of the biometric digital ID system Aadhaar in 2010 was the first significant step. This has changed everything because it made bank account access easier by cutting down on the time and expense associated with the "know your customer" (KYC) procedure. The first big spike in digital payment usage (Crouzet et al., 2019), especially with mobile money, was as a result of demonetization.

This Journal is licensed under a Creative Commons Attribution 4.0 International License

Since Paytm launched its mobile money payments service in 2010, the company saw a large spike in transaction volumes following the policy announcement (Khera, 2023), which contrasted with a relatively low volume before the policy announcement. The use of mobile money increased significantly after demonetization (Chodorow-Reich et al., 2020), and this trend continued to boost the user base's growth rate. Through a variety of payment channels, the UPI enables instantaneous and real-time interbank transfers, facilitating business operations between banking and nonbanking institutions. The use of digital financial services increased in response to lockdowns and social alienation (Agur et al., 2020; Sahay et al., 2020). Despite the fact that fintech (financial technology) companies first terminated operations during the lockdown because they were unsure how COVID-19 would affect their risk and business plans (Khera, 2013), tensions subsided later in the year and the industry is still highly optimistic.

The COVID-19 pandemic has already affected nearly every individual and every sector across the world. Also, as a result of government rules, everyone must stay at home and stores have closed during pandemic. In spite of these precautions, people still had to buy goods and use services for their daily needs, employment, and leisure. During COVID-19, consumers were more likely to use digital finance to make purchases of goods and services. Also, every region of the nation promoted the usage of electronic currency transfers and digital transactions. With digital financial services, customers and financial institutions feel more empowered to cut down on time spent traveling and filling out paperwork, as well as to save money by working together. E-wallet usage is one of the digital financial services (Revathy and Balaji, 2020), which can be positively and significantly predicted by perceived security, social influence, and performance expectancy.

Digital Financial Services (DFS) has acted as a mainstay for many during pandemic. The contemporary financial solutions are generally referred to as financial technology solutions. Ravikumar et al. (2022) pointed out that globally, fintech has been growing, with an estimated value of about $127 billion. With their innovative products, real-time solutions, and fresh approaches to credit assessment, digital lending companies have completely changed the lending landscape. Despite the COVID epidemic, the digital lending industry witnessed 38% (Equifax and SIDBI, 2021) Year on Year (YoY) growth since September 2020.

In general, most of the people made their transactions online due to the lockdown, and digital financial services have become essential for ensuring simple and easy transactions. Le (2021) reported that trust, data security (Wang and Chang, 2018), usability (Billore and Billore, 2020), computer literacy (Rauniar et al., 2014), quality financial services play a positive role in using digital financial services. The reason behind users' perceptions of the new technology's usefulness and improved performance is its perceived usefulness (Le, 2021). The impact of COVID-19 lockdown, security and privacy, trust, and quality services are among the four elements that greatly influence and contribute to perceived usefulness (Le, 2021), which in turn increases the intention to use digital financial services following COVID-19 lockdown.

India's economy was in complete collapse because of COVID-19. Lending has played a crucial role in getting back on the growth track. Over time, the Indian loan market has gradually adopted digitalization. India's digital lending market is expanding as a result of several factors. Growing demand for quick loans, an inclusive approach, creative lending products, and a supportive regulatory and policy environment for digital lending are some of the contributing factors. In India, digital lending to small firms has witnessed the highest growth in India. The use of financial apps for digital lending began to grow gradually. The users began using just a "click go" option and liked the simple approach (Prasad, 2022) to obtaining a loan without a lengthy paperwork process.

An important determinant of user attitude and behaviour regarding technology use in business is perceived usefulness, which represents the degree to which one believes that technology will increase their performance and productivity. Perceived usefulness (Ghazali et al., 2018) has served as the main antecedent of users' attitudes toward adopting mobile banking services.

In general, users' perceptions of the mobile banking system's effectiveness and usefulness have a beneficial impact on their attitudes (Mohammadi, 2015). In general, consumers in emerging economies prioritize convenience while utilizing technology, and that perceived usefulness is a major determinant of user attitude and m-commerce usage (Rahman and Sloan, 2017). Perceived ease of use is one of the important variables that increase clarity, facilitating conditions and flexibility in adapting new technology (Popy and Bappy, 2022). In a similar vein, Hsu et al. (2011) provide empirical proof that ease of connectivity and convenience of financial transaction are necessary conditions for building a favourable attitude toward using digital financial services. Usage (Laukkanen et al., 2007) and risk barriers (Kaur et al., 2020) might act as a barrier in adapting digital financial services, in which these two components are related with trust issues in using m-commerce adaption. Since uncertainty and risk have a significant impact on consumers in e-commerce and mobile payments, trust (Himel et al., 2021) plays a major role in shaping users' attitude and intention.

In exploring money as a sensitive issue, many studies consider trust and security concerns into account (Merhi et al., 2019). It's still critical to emphasize how companies protect customer data and consistently foster service trust, particularly with emerging technologies. One of the best indicators of a person's intention to keep using digital financial services is trust (Jaiswal et al., 2022). Finally, given the importance of individual inventiveness and hedonic motives, it is also important to highlight that people who are more receptive to innovation or who enjoy utilizing these kinds of solutions are more likely to adopt them (Rahman et al., 2020). According to Neves et al. (2023) in addition to the conventional technology aspects, it is critical that businesses demonstrate how they handle and safeguard data in order to foster a trustworthy atmosphere.

Effective financial consumer protection is more crucial than ever in light of the increasingly digital landscape for financial products and services, which has been further accelerated by the COVID-19 pandemic response. Additionally, digitalization has

the potential to support greater financial inclusion and inclusive growth. The methods and regulations created and implemented by financial consumer protection authorities must also change and adapt to keep up with the times. Financial customers can profit greatly from digitalization, but there are new hazards involved as well. Positive effects include increased speed, usage experience, personalization, security and trust, and consumer access to a wider range of goods and services at reduced prices (OECD, 2020). New types of online theft and fraud, data breaches, invasions of privacy, and occurrences involving digital security are among the risks.

The COVID-19 outbreak affected the economy's liquidity as well as important payment markets. Additionally, there has been a sharp decline in consumer expenditure. Individuals' interest in digital financial services has been expanding throughout the world during the pandemic, particularly in developing and emerging economies, as these companies offer financial solutions that allow individuals to maintain their standard of living. Nonetheless, a lot of users avoid digital financial service because they lack faith in digital platforms, particularly in developing nations. Even with digital financial service's growth, many developing nations still confront difficulties. Also, applications of blockchain technology have the potential to generally speed up India's efforts to promote financial inclusion. Through the resolution of certain obstacles, blockchain-based mobile banking applications have the potential to provide financially excluded individuals with affordable, equitable, and appealing financial products and services. However, there are a number of research problems that must be addressed before such apps may be implemented and help reduce financial exclusion in India. There is a research gap in understanding complex relationships between usability, user experience, trust, facilitating conditions, and technology self-efficacy. Many studies focused on each variable separately but the overall relationship between these variables and intention to use digital services remains a gap in the existing literatures. Bridging this gap may benefit legislators, financial institutions, and tech companies looking to improve financial inclusion by efficiently applying blockchain technology by providing important information. This research tries to identify how the factors usability, usage experience, trust, facilitating conditions and technology self-efficacy impact the intention of the consumers to use the digital financial services. In addition to that, the study also investigates how digital consumer protection, moderates the relationship between the identified variables.

2. LITERATURE REVIEW

The main objective of blockchain technology is to accelerate financial inclusion and redefine how people brought about a revolutionary shift with the engagement of digital financial services. This revolutionary shift by the blockchain have disrupted the traditional financial services and created new opportunities for inclusion. It is crucial to understand the dynamics of the landscape of digital finance. This study is focuses on the complex factors that influences user's intention to use digital financial services. The factors were namely Usability, user experience, trust, enabling conditions and technological self-efficacy. Further the study found the interrelationships between these factors and user's intention to use digital financial services.

2.1. Impact of Usability towards Intention to Use Digital Financial Services

Hermawan et al. (2022) made a study on the impact of financial inclusion and literacy on user's intention to use digital finance MSMEs. The authors say that usability plays as a key factor of digital financial services, which includes ease of use and user friendliness. Factors such as financial literacy and inclusion, perceived usefulness, and compatibility also impact the intention to use digital financial services.

Khan and Siddiqui (2019) found some of the influencing factors which includes information requirements, process risk and experience. Further, the study found that user interaction and intention to use mobile payments have a positive influence by usability aspects such as content, ease of use, and emotion.

The study of Tsai et al. (2014) say that perceived usability is significantly influenced by the factors such as satisfaction, trust, and perceived enjoyment of users in shaping their intention to use digital financial services.

Konradt et al. (2012) studied about the role of usability in e-commerce services. In this study the authors used predictors like trust, reputation, perceived fun to measure usability. The results of the showed a dual effect of usability on user satisfaction and trust.

Liu et al. (2011) made an analysis on mobile payment interface usability and expanding the Microsoft usability guideline and proposed a model for examining the intention to use mobile payment methods. The extended technology acceptance model (TAM) highlights the roles of system usability and user satisfaction in intention to continue using internet banking services of users. The results of the study found factors such as content, ease of use, promotion, made-for-the-medium and emotion are positively influencing interaction behavior and intention to use mobile payment.

The study of Kafsh (2015) developed a new technology acceptance model by integrating TAM with IDT and to find the factors which influences people's behavioral intentions to use mobile wallet. The study results show that factors such as people behavioral intention to use Mobile Wallet, is significantly influenced by trialability on the perceived usefulness. Further, subjective norm and awareness correlate with ease of use.

Bhardwaj and Kaur (2019) explored usage of Paytm, revealing that people are attracted by the cashback offered by Paytm app, even though they lack enough knowledge on other services offered by them. Paytm mobile app are considered more convenient, fostering satisfaction and intentions to continue use. The types of payment method used by consumers in various period of time has been presented in the Table 1.

2.2. Impact of User Experience towards Intention to Use Digital Financial Services

Gupta et al. (2023) made a study to determine how users' experiences with the Unified Payments Interface (UPI) system affected how Indians used Central Bank Digital Currency (CBDC). The study examined the connections between technology,

cognitive variables, and behavioral intentions towards CBDC usage using a unique conceptual framework. The study used a partial least squares structural equation model (PLS-SEM) to examine the proposed model and the connections between components during the CBDC pilot launch in significant Indian cities. Important discoveries include the substantial effects of performance anticipation and hedonic incentive on behavioral intentions towards CBDC, with social influence also being a major factor in its use. The study revealed factors impacting CBDC uptake and usage behaviour in India, including the negative moderating effect of past UPI usage on some connections.

Rupeika-Apoga et al. (2022) made a study to find the necessary support given by the public to SMEs (small and medium-sized enterprises) in providing policy makers with supervision on how to enable an effective digital transformation. The authors say that the role of digital technologies is crucial in the future accomplishment of an extensive range of industries, from managing the business to experience of the customer, yet, executive teams need to get beyond the opposition of employees in adopting digital transformation.

Sivathanu (2019) studied about the adoption of digital payment systems in the era of demonetization in India. The results of this empirical study show that behavioral intention and modernization resistance impact digital payment system usage and resilience to cash payments mediates relationship between BI and AU.

According to Bijlsma et al. (2021) users with positive UPI experiences may exhibit reluctance to transition to a new payment system like CBDCs. However, the UPI usage experience may act as a mediating factor, influencing the variables associated with the examination of Central Bank Digital Currency (CBDC) usage.

Ma et al. (2022) made a study on the payment intention of Central Bank Digital Currency Design. The results of the empirical study show that the predictors of trust are perceived privacy, security, and system quality, trust predicts interest and intention to use CDBC platform for digital transactions.

Zhang and Huang (2022) studied about the blockchain and central bank digital currency. The study analyzed both functional and non-functional needs of CBDC design. The findings of the analysis show that a blockchain with permissions are more suitable for CBDC when compared to blockchains with no permission. The study also found some issues in CBDC based on blockchain, which includes, performance, scalability, and cross-chain interoperability.

Poongodi et al. (2021) studied about the perceptions of users in the context of Google Pay. Singh et al. (2017) found strong relationship between perceptions of the customer and satisfaction of mobile wallet users especially in North India. Table 2 presents the usage experience of the consumers on using different types of payment apps.

2.3. Impact of Trust towards Intention to Use Digital Financial Services

The study of Ludwina et al. (2022) strongly say that trust plays an important role in influencing the intention to use the digital financial services. It was found that customer satisfaction and intention to use digital financial services are highly affected by trust. It is important to build trust with the customers to run a successful e-business.

A significant positive relationship is found between trust and intention to use e-wallet services in the study of Hossain et al. (2022), additionally with security and privacy, perceived usefulness and perceived ease of use. The findings show that young generation users are more likely to use e-wallet services due to the convenience of transactions and payments. Further the authors suggest service providers to focus on the privacy and security of the users, which could help in increasing the e-wallet facilities among the users.

The study of Poerjoto et al. (2021) found that system, service, and information quality all have a significant positive impact on the development of trust, which in turn influences continuous use intention of digital payment among users.

Sutarso (2022) found that security and risks associated operations significantly influences the digital payment usage intention. Yet, these risks do not directly impact the intention to use digital payment apps.

The study of George and Sunny (2023) found that trust positively affects the customer's usage intention and satisfaction of mobile wallets.

Laurence and Candiwan (2020) made a study on the significant role of trust toward continuance usage intention of mobile payment with gender as moderator. The study results found that factors such as reputation, customization, security, and mobility influence user's trust in continuous usage intention of mobile payment services. Table 3 presents how trust acts as a factor in influencing consumers towards usage of digital financial services.

2.4. Impact of Facilitating Conditions towards Intention to Use Digital Financial Services

Miraz et al (2022) say that people believe that a technical and regulatory framework supports the usage of a system in facilitating conditions. Ghalandari (2012) found that facilitating conditions helps in building awareness and enhancing intimate connection with intentions.

The study of Himel et al. (2021) found that several past studies found that perceived usefulness, performance expectancy, perceived ease of use, subjective norms, demographics, perceived risk, and facilitating conditions influences the usage intentions of m-commerce, m-payment, and mobile financial services among users.

A Taiwanese study by Chen et al. (2020) found the facilitating factors such as government support, social influence, perceived transaction convenience, and added value, significantly influence the intention to use digital financial services. The results of the study support the positive impact of facilitating conditions, with government assistance having the most significant influence on usage intention.

Nayanajith (2019) made a study on students at the University of Kelaniya in Sri Lanka, which underscores the importance of facilitating conditions, particularly organizational infrastructure, in shaping the intentions and behaviors towards digital banking adoption among students. Furthermore, the study not only addressed the limitations but also the findings emphasized the potential benefits of improving the usage of digital banking among Sri Lankans by creating a supportive environment. The impact of the intention to use digital financial services as identified by different authors has been presented in the Table 4.

2.5. Impact of Technology Self-efficacy towards Intention to Use Digital Financial Services

Lee (2021) made a study on the role of digital technostress and self-efficacy in on the usage intention of Chinese Gen Z customers towards Fintech services. The results of the study found a negative relationship between technostress and intention to use Fintech services. The moderating effect of Self-efficacy on the Fintech usage intention has a significant interaction which influence with complexity and overload.

Similarly, Putriani and Apriani (2022) made study which aimed to examine how digital technostress and digital self-efficacy impact Gen Z consumer's intention to use Fintech in Indonesia. It is found in the results that the impact of technostress on intention to use Fintech is reduced by the digital technology self-efficacy which increases the intention to use of Fintech among Gen Z customers.

Jumardi et al. (2019) made a study to examine the influence of self-efficacy, trust and lifestyle on digital financial transaction usage intention. The findings of this study show that there is a significant effect of self-efficacy, trust and lifestyle on the usage intention of digital financial transaction services. These behavioral factors influence service implementation, and the usage of e-payment can be improved by enhancing these factors.

Contrarily in the study of Abdul Halim et al. (2023), self-efficacy did not significantly influence the intention to use digital financial services among the employees of retail banks in Kuala Lumpur. Instead job relevance and perceived usefulness influence intention to use digital financial services positively.

Zhang et al. (2023) studied about the factors that determines the behavioral intention of the consumers to adopt near-field communication mobile payment (NFC) in the context of developing countries especially in Pakistan. The findings show independent variables such as self-efficacy, perceived critical mass, and mobile ease of use determine the intention to use mobile payment among consumers.

2.6. Moderating Role of Digital Consumer Protection

Tarigan and Paulus (2020) made a study which provides an overview of digital banking services implementation and customer protection and the risks from digital banking services. This study highlights two types of protection namely preventive protection and repressive protection in which preventive protection is made by the government in protecting the data of consumers who are using digital banking services. The findings of this study reveal that these types of protection enhance the trust of consumers and influences their intention to use digital banking services positively. This is also supported by the study made by Kornelis (2022) on digital banking consumer protection developments and challenges. The author say that trust and consumer security is crucial for banking sector which makes customers to trust the bank as a one-stop service for all their financial needs.

Prima et al. (2022) made a study on the consumer legal protection principles of billing mechanism by digital financial service provider in Indonesia. The study results found that digital document protection must ensure accessibility, display and integrity of digital documents. Consumer protection violations like non-compliance with legal requirements and improper personal data handling can negatively impact consumer's trust and intention to use digital financial services.

2.7. Hypothesis and Research Framework

The research framework is presented in the Figure 1.

H1: There is a positive correlation between usability and intention to use digital financial services.

H2: There is a positive correlation between Facilitating and intention to use digital financial services.

H3: There is a positive correlation between Trust and intention to use digital financial services.

H4: There is a positive correlation between user experience and intention to use digital financial services.

H5: There is a positive correlation between technology self-efficacy and intention to use digital financial services.

H6: Digital consumer protection moderates the relationship between usability, facilitating condition, trust, user experience and technology self-efficacy towards intention to use digital financial services.

2.8. Research Gap

There is a research gap in understanding complex relationships between usability, user experience, trust, facilitating conditions, and technology self-efficacy. Many studies focused on each variables separately but the overall relationship between these variables and intention to use digital services remains a gap in the existing literatures. Bridging this gap may benefit legislators, financial institutions, and tech companies looking to improve financial inclusion by efficiently applying blockchain technology by providing important information.

2.9. Summary

The study's conclusion explored the effects of blockchain technology on the services offered by digital financial services and highlighted the complex correlation between self-efficacy, trust, usability, and user experience. The study further emphasizes the need for understanding these factors in the context of developing countries. The research suggests that bridging the knowledge gap will contribute to enhance the financial inclusivity by providing valuable insights for stakeholders who are involved in the improvement and implementation of blockchain based financial services. Through interpreting these details, the research offers significant perspectives that will steer forthcoming endeavors aimed at refining digital financial services and promoting financial inclusion.

Table 1: Type of payment method used

Authors	Year	Payment App
Khan and Siddiqui	2019	Mobile Payment
Konradt et al.	2012	Digital Commercial Service
Liu et al.	2011	Internet Banking
Kafsh	2015	Mobile Wallet
Bhardwaj and Kaur	2019	Paytm

Source: Author

Table 2: User experience of different payment apps

Authors	Year	User experience	Payment App
Gupta et al.	2023	Positive	Unified Payments Interface (UPI)
Rupeika-Apoga et al.	2022	Moderating (Positive/Negative)	UPI Platform
Sivathanu	2019	Not specified	UPI Platform
Bijlsma et al.	2021	Reluctance (Positive)	Unified Payments Interface (UPI)
Ma et al.	2022	Cautious (Negative)	Central Bank Digital Currency (CBDC)
Zhang and Huang	2022	Cautious (Negative)	Central Bank Digital Currency (CBDC)
Poongodi et al.	2021	Positive	Google Pay
Singh et al.	2017	Positive	Mobile wallets

Source: Author

Table 3: Factors influenced by trust in the intention to use digital financial services

Authors	Year	Factors influenced by trust
Hossain et al.	2022	Perceived utility, privacy and security, trust, simplicity of use
Poerjoto et al.	2021	System, service, and information quality
Sutarso	2022	Trust influenced by security and operational issues, importance with younger individuals, ease, and adaptability for transactions
George and Sunny	2023	Trust positively affects customer's usage intention and satisfaction of mobile wallets
Laurence and Candiwan	2020	Trust-influencing elements: Reputation, customization, security, and mobility; Moderated by gender

Source: Author

Table 4: Impact on intention to use digital financial services

Author (s)	Year	Impact on intention to use digital financial services
Miraz et al.	2022	Positive
Ghalandari	2012	Positive
Himel et al.	2021	Positive
Chen et al.	2020	Positive
Nayanajith	2019	Positive

Source: Author

3. RESEARCH METHODOLOGY

This research adapts a quantitative strategy. Primary data has been collected for the purpose of the research. This research has collected data from the people of Gujarat.

3.1. Data Collection and Sampling

Data has been collected through closed ended questionnaire. The target respondents were the people of Gujarat with a minimum monthly income of 30,000 INR. Google forms were used to distribute the questionnaires to the target respondents. The sampling design adapted was random sampling. The number of actual responses received upon data collection was 528. Therefore, the sample size is determined to be 528.

Figure 1: Research framework

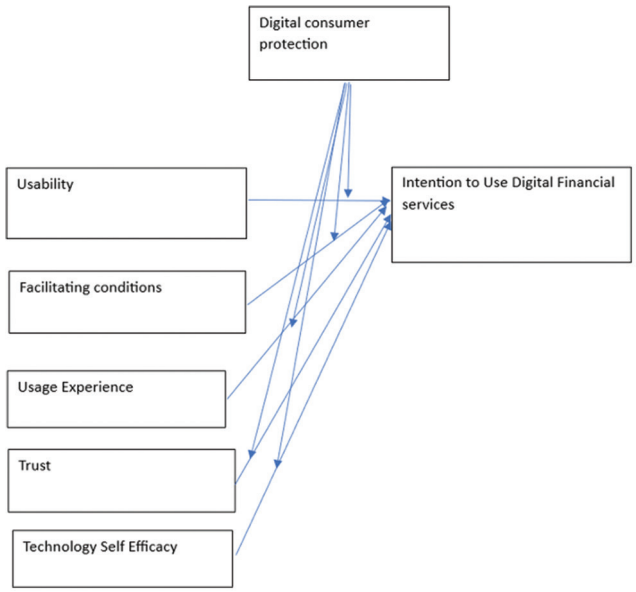

3.2. Research Instrumentation

Standard research instruments were adapted to measure the proposed variables. Digital consumer protection has 16 items and has been adapted from Bongomin and Ntayi (2020). Usability has 3 items and has been adapted from Asif et al. (2023). Facilitating conditions has 5 items and has been adapted from the work of Yang et al. (2021). Usage experience has 3 items and has been adapted from Gupta et al. (2023). Trust has 6 items. It is adapted from George and Sunny (2022). The 4-item scale for measuring Technology self-efficacy has 4 items has been adapted from Zhang et al. (2023). Intention to Use Digital Financial services has 3 items and has been adapted from the work of Lutfi et al. (2021).

3.3. Analysis and Research Ethics

Structured Equation Modelling has been adapted in order to analyze the primary data collected. The moderation analysis has been carried out using Hayes Process Macro. The software used are SPSS and AMOS. Data was collected from the respondents without violating ethical guidelines. Care was ensured to maintain the confidentiality of the respondents.

4. ANALYSIS AND FINDINGS

4.1. Demographic Data

According to the Table 5, the demographic data shows that the majority of the respondents are female (56.8%), whereas the remaining are male respondents, which ratio is as follows: (43.2%). The age groups of 20-25 years (9.7%), and 26-30 years are observed to be higher with (49.6%) and 31-35 years are (20.3%). Also 36 and above holds the ratio of 20.5%. Many respondents (50%) were aware of mobile wallet/E-wallet digital financial services, followed

	Frequency (f)	Percent	Valid %	Cumulative %
Gender				
Male	228	43.2	43.2	43.2
Female	300	56.8	56.8	100.0
Total	528	100.0	100.0	
Age				
20-25 years	51	9.7	9.7	9.7
26-30 years	262	49.6	49.6	59.3
31-35 years	107	20.3	20.3	79.5
36 and above years	108	20.5	20.5	100.0
Total	528	100.0	100.0	
Income				
Rs. 30,000-Rs. 50,000	69	13.1	13.1	13.1
Rs. 51,000-Rs. 70,000	243	46.0	46.0	59.1
Rs. 71,000-Rs. 90,000	144	27.3	27.3	86.4
Rs. 90,000 and above	72	13.6	13.6	100.0
Total	528	100.0	100.0	
Which of the following digital financial services are you aware of?				
Cards	120	22.7	22.7	22.7
Mobile wallet/E-wallet	264	50.0	50.0	72.7
Unified Payment Interface (Google pay/phone Pe)	90	17.0	17.0	89.8
Central Bank Digital currency/CBDC	54	10.2	10.2	100.0
Total	528	100.0	100.0	
Cards	120	22.7	22.7	22.7
Total	528	100.0	100.0	
Which of the following digital financial services do you use frequently?				
Cards	140	26.5	26.5	26.5
Mobile wallet/E-wallet	244	46.2	46.2	72.7
Unified Payment Interface (Google pay/phone Pe)	126	23.9	23.9	96.6
Central Bank Digital currency/CBDC	18	3.4	3.4	100.0
Total	528	100.0	100.0	
Cards	140	26.5	26.5	26.5
Total	528	100.0	100.0	
How many times do you use these services once in a month?				
<5 times	53	10.0	10.0	10.0
5-20 times	403	76.3	76.3	86.4
More than 20 times	72	13.6	13.6	100.0
Total	528	100.0	100.0	

by cards (22.7%), Phonepe and Google pay (17.0) digital payment applications. 46.2% of the respondents. Mobile wallet/E-wallet (46.2%) was found to be largely used by many respondents, followed by cards (26.5%) and UPI (Phonepe and Google pay) (23.9%).

4.2. Reliability Analysis

The reliability of the scale has been experiments using the alpha test, in which the alpha value above 0.7 is considered reliable and good-fit. The reliability analysis was conducted for 7 constructs in total. Table 6 shows that all the variables are above 0.7, which insists that the scale is significantly reliable.

Name of the construct	Alpha Value (a)
Digital consumer protection	0.927
Usability	0.841
Facilitating conditions	0.933
Usage experience	0.699
Trust	0.899
Technology self-efficacy	0.832
Intention to use digital financial services	0.702

4.3. Factor Analysis

The aim of factor analysis, in general, is to model the correlations amongst given items. Also, the factor analysis aims to lessen the total number of components in order to explain and as well to interpret the findings. The value of KMO Bartlett's (Table 7) and Principal Component Analysis (PCA) is given in the Table 8.

The obtained KMO value is 0.723 and the significant and the P-value is 0.000 (<0.05). The rotated component matrix is presented in the Table 8.

The coefficient absolute values obtained in the Table 8 shows that the variances are maximized with reduced dimensionality. And Rotation is found to be converged in 7 iterations.

Table 5: Demographic profile of respondents

Authors	Year	Relationship of self-efficacy
Putriani and Apriani	2022	Positive
Lee	2021	Positive
Abdul Halim et al.	2023	Negative
Jumardi et al.	2020	Positive
Zhang et al.	2023	Positive

Source: Author

Table 6: Reliability analysis

Author (s)	Year	Role of digital consumer protection
Tarigan and Paulus	2020	Positive
Kornelis	2022	Positive
Prima et al.	2022	Both

Source: Author

4.4. SEM Analysis

The SEM path diagram (Figure 2) shows the relationships of the variables involved. Latent variables are a part of the structural model, where SEM has been used to validate the data.

The degree of freedom is computed in the Table 9. As per Table 10. The estimated Chi-square value is 1467.428, with df of 236 and probability as 0.000, which shows that the proposed model is a good-fit.

From Table 11 it is observed that CMIN/DF (Chi-square) from the Table 12 it 3.218 and RMR (root-mean-square) value is 0.103 with significance P = 0.000. Besides, as per Table 12, the observed value of GFI (goodness-fit-index) is 0.905, in which all the values are within the acceptable range.

The obtained CFI value is 0.930 (which is literally near to '1'), as per Table 13, which insist that proposed model is good-fit. Also, the obtained parsimony values as shown in the Table 14 exhibit that the model is neither simpler nor complex.

The regression weights have been presented in the Table 15.

Table 7: KMO and Bartlett's test

Kaiser-Meyer-Olkin Measure of Sampling Adequacy		0.723
Bartlett's test of sphericity	Approx. Chi-square	19320.848
	df	561
	Sig.	0.000

Figure 2: SEM path diagram

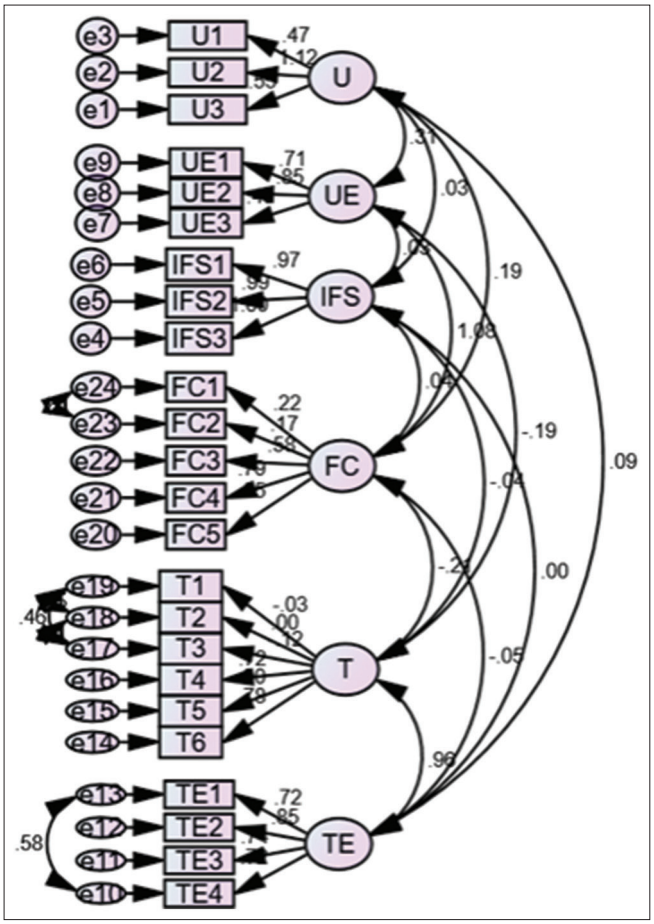

4.5. Moderator Analysis

Moderating variable "financial services and intention to use digital financial services" has been analyzed using the Hayes Process-Macro.

A graph is generated and presented in the Figure 3, for the moderating analysis based on the values of the Table 16.

Figure 3: UTOT

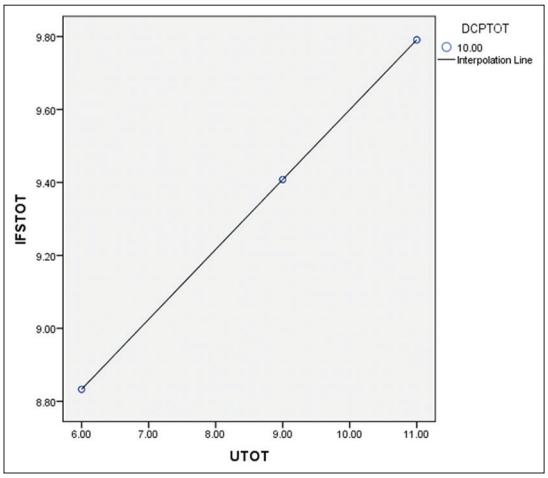

Figure 4: FCTOT

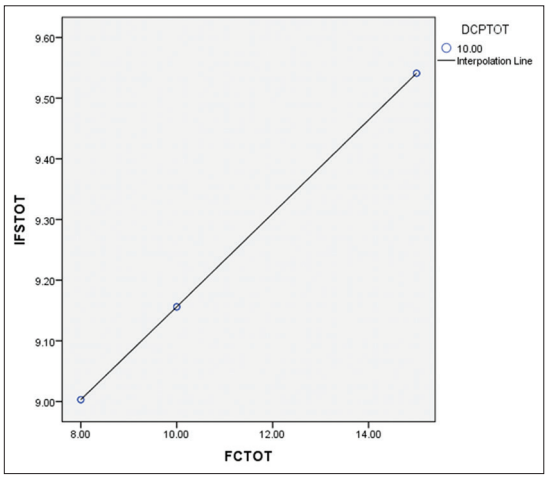

Figure 5: UETOT

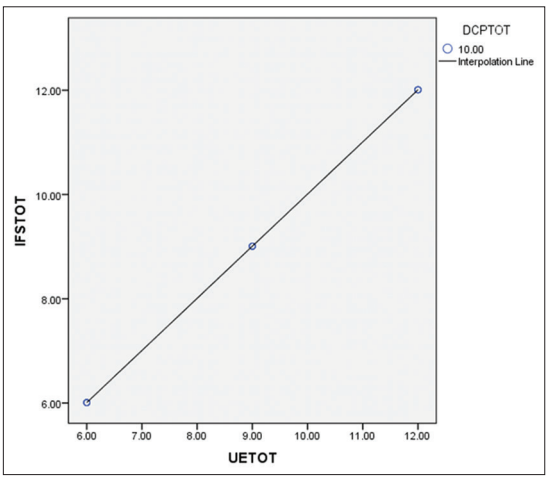

Table 8: Rotated component Matrix[a]

Items	Component							
	1	2	3	4	5	6	7	8
I feel confident turning to an online discussion group about a digital financial payment service.	0.825							
I feel confident understanding the terms or words that are needed to use a digital financial payment service.	0.802							
I regularly make use of services that promote financial inclusion that are enabled by advances in financial technology.	0.788							
Several of the services that are based on fintech are quite important to me.	0.786							
I feel confident learning advanced features in the digital financial payment service in order to protect the customers	0.705							
I feel confident in my ability to figure out what to do when a feature does not work in the digital financial payment service.	0.695							
When it comes to financial inclusion, I am likely to use services powered by financial technology.	0.694							
I believe that the digital financial payment service providers have a good reputation		0.854						
I trust digital financial payment service providers to keep customer's interests in mind		0.831						
I feel the digital financial payment service providers have a reputation for being honest		0.808						
I believe the legal frameworks for digital financial payment services are adequate to protect the customers		0.799						
I trust digital financial payment services to be reliable and trustworthy		0.781						
I trust digital financial payment service platforms to be competent and effective in handling my transactions		0.757						
I have access to the software and hardware required to use a digital financial payment service			0.900					
The digital financial payment services I use are well integrated and provided in a stable service infrastructure			0.880					
My service provider/operator facilitates the use of digital financial payment service			0.879					
I have the financial and technological resources required to use digital financial payment service			0.864					
I am given the necessary support and assistance to use a digital financial payment service			0.829					
I believe that the blockchain technology can stop intrusion into my account				0.888				
I can easily stop a wrong digital financial payment transaction				0.860				
The digital financial payment service providers have strong internal controls to protect all my transactions				0.799				
The digital financial payment service provider gives a lot of security instructions on how to protect my account from fraudsters				0.780				
I believe that the associated risk with digital financial payment is minimal				0.618				
I was pleased with digital financial payment service interface handling of the transactions.					0.909			
I seriously intend to use digital financial payment service in the near future					0.907			
It would be very likely that I will use digital financial payment service in the near future					0.733			
Using digital financial payment service interface instead of cash is more convenient.					0.731			
I feel secured to give my data over the digital financial payment platform						0.830		
I am not worried to use digital financial payment because of its safety						0.794		
I feel assured that the digital financial payment will be refunded if it is sent to the wrong person						0.782		
I frequently use the digital financial payment service interface.							0.913	
I expect that I would use digital financial payment service in the near future							0.911	
It is easy to get all the useful information about digital financial payment								0.823
I do not have fear that the digital financial payment agent will wrongly process my transactions								0.792

Extraction Method: Principal Component Analysis.
Rotation Method: Varimax with Kaiser Normalization.

[a]Rotation converged in 7 iterations

Table 9: Computation of degrees of freedom (Default model)

Number of distinct sample moments	300
Number of distinct parameters to be estimated	64
Degrees of freedom (595-83)	236

Table 10: Default model's result: Achieved the minimum

Chi-square	1467.428
Degrees of freedom	236
Probability level	0.000

Table 11: CMIN

Model	NPAR	CMIN	DF	P	CMIN/DF
Default model	64	1467.428	236	0.000	3.218
Saturated model	300	0.000	0		
Independence model	24	4042.442	276	0.000	14.647

Table 12: RMR, GFI

Model	RMR	GFI	AGFI	PGFI
Default model	0.103	0.905	0.921	0.728
Saturated model	0.000	1.000		
Independence model	0.263	0.457	0.410	0.420

Table 13: Baseline comparisons

Model	NFI Delta1	RFI rho1	IFI Delta2	TLI rho2	CFI
Default model	0.924	0.922	0.912	0.913	0.930
Saturated model	1.000		1.000		1.000
Independence model	0.000	0.000	0.000	0.000	0.000

Table 14: Parsimony-adjusted measures

Model	RMSEA	LO 90	HI 90	PCLOSE
Default model	0.059	0.065	0.104	0.000
Independence model	0.161	0.157	0.165	0.000

A graph is generated and presented in the Figure 4, for the moderating analysis based on the values of the Table 17.

A graph is generated and presented in the Figure 5, for the moderating analysis based on the values of the Table 18.

4.6. Results of Hypothesis Testing

The following Table 19 presents the results of the Hypotheses tested in this research.

Since the invasion of digital financial services, individuals who have been ignored by formal financial systems could have easy access to financial services. The term digital financial services refer to an extensive range of financial services, which can be accessed and delivered digitally, and payments, credit, savings, etc. are some important component of it (Kambale, 2018). These include well-known applications such as credit and debit cards, mobile payment applications, which are mainly developed by banks, and also novel approaches on the basis of cloud computing, and distributed ledger technology (DLT). Besides, these include peer-to-peer (P2P) applications, and crypto-assets.

Table 15: Regression weights

Relationship between variables			Estimate	S.E.	C.R.	P	Label
IFS	<---	U	1.018	0.434	2.344	***	
IFS	<---	TE	1.111	0.339	3.278	***	
IFS	<---	FC	−1.112	0.543	−2.047	***	
IFS	<---	UE	−0.271	0.281	0.453	***	
IFS	<---	T	2.846	729.7	0.004	***	
U3	<---	U	5.100	0.154	0.542	***	
U2	<---	U	1.378	0.131	10.510	***	
U1	<---	U	1.089	0.109	9.977	***	
FC5	<---	FC	1.20	0.142	3.531	0.246	
FC4	<---	FC	0.998	0.122	8.163	***	
FC3	<---	FC	1.353	0.141	3.629	0.142	
FC2	<---	FC	1.498	0.100	1.574	0.265	
FC1	<---	FC	0.146	0.100	1.456	0.145	
UE3	<---	UE	1.250	0.245	5.142	0.001	
UE2	<---	UE	0.930	0.081	11.484	***	
UE1	<---	UE	0.720	0.079	9.080	***	
T6	<---	T	1.353	0.141	9.629	***	
T5	<---	T	−521.799	104.914	−0.004	0.027	
T4	<---	T	4609.869	187.700	0.004	***	
T3	<---	T	4267.302	76.717	0.004	0.097	
T2	<---	T	5352.635	051.411	0.004	***	
T1	<---	T	4333.544	5.962	0.004	***	
TE4	<---	TE	1.000	0.082	9.078	***	
TE3	<---	TE	2.052	0.380	5.405	***	
TE2	<---	TE	1.861	0.335	5.563	***	
TE1	<---	TE	2.378	0.431	5.513	***	
IFS1	<---	IFS	1.000	0.54	9.15	0.21	
IFS2	<---	IFS	0.825	0.082	10.078	***	
IFS3	<---	IFS	0.867	0.086	10.076	***	

Table 16: IFSTOT versus UTOT

Model: 1
Y: IFSTOT
X: UTOT
W: DCPTOT
Sample Size: 528

Outcome variable: IFSTOT						
Df1	df2					
3.000	524.000					
Model Summary						
MSE	F	Df1	Df2			
5.754	30.449	3.0000	524.000			
Model						
	coeff	SE	t	P	LLCI	ULCI
Constant	9.767	0.634	15.398	0.000	8.521	11.013
UTOT	0.034	0.072	0.463	0.644	0.176	0.109
DCPTOT	0.208	0.033	6.395	0.000	0.272	0.144
Int_1	0.023	0.004	6.205	0.000	0.015	0.030

***Level of confidence for all confidence intervals in output: 95.0000

Fintech is a general term used for these innovative digital solutions. Nevertheless, in some part of the country, including Gujarat lacks access to basic financial services (Gangani and Raval, 2021) and access to digital financial services remains restricted, regardless of the potential advantages of these services. This study intends to investigate the level of digital financial service in Gujarat region. Similarly, study by (Gangani and Raval, 2021); Kamani et al. (2022) discussed digital financial inclusion in Gujarat, but significant factors such as

Table 17: IFSTOT versus FCTOT

Model: 2
Y: IFSTOT
X: FCTOT
W: DCPTOT
Sample Size: 528

Outcome variable: IFSTOT						
Df1			df2			
3.000			524.000			
Model Summary						
MSE	F	Df1	Df2			
6.504	6.776	3.0000	524.000			
Model						
	coeff	SE	t	P	LLCI	ULCI
Constant	9.131	0.543	16.806	0.000	8.063	10.198
FCTOT	0.023	0.045	0.521	0.602	0.065	0.112
DCPTOT	0.074	0.029	2.523	0.012	0.132	0.016
Int_1	0.005	0.002	2.209	0.028	0.001	0.010

***Level of confidence for all confidence intervals in output: 95.0000

Table 18: UETOT versus IFSTOT

Model: 3
Y: IFSTOT
X: UETOT
W: DCPTOT
Sample Size: 528

Outcome variable: IFSTOT						
Df1			df2			
3.000			524.000			
Model Summary						
MSE	F	Df1	Df2			
0.231	4925.027	3.0000	524.000			
Model						
	coeff	SE	t	p	LLCI	ULCI
Constant	0.196	0.127	1.545	0.123	0.444	0.053
UETOT	1.009	0.013	75.350	0.000	0.983	1.035
DCPTOT	0.020	0.006	3.134	0.002	0.008	0.033
Int_1	0.001	0.001	1.224	0.221	0.002	0.001

***Level of confidence for all confidence intervals in output: 95.0000

usability of digital service, consumer protection, technology self-efficacy have been ignored.

This study intends to fill this gap by examining all these elements together. Individual's behavioural intention is generally determined by trust, security, usability, and eventually social influence (Asif et al., 2023). Accordingly, this paper also investigated the impact of these variables as significant dimension in the usage of fintech services. In the current study, usability and trust of digital financial services are found as variables that influence the intention to use digital financial services, which is similar to the study by Asif et al. (2023). Technology self-efficacy is described by individuals' willingness to adapt new technology and their capability to make use of it positively (Technology self-efficacy of digital financial services is found to impact the intention to use digital financial services in the current study. The same factor is emphasized in the study by (Lee, 2023), i.e. digital technology self-efficacy is influenced by fintech usage intention. Digital technology self-efficacy is found to be positively related with the usage intention of fintech services (Sujith et al., 2022).

Table 19: Hypothesis testing results

No	Hypothesis	Results
1	Usability of digital financial services impact on the intention to use digital financial services	Accepted
2	Facilitating conditions of digital financial services impact on the intention to use digital financial services	Rejected
3	Usage experience of digital financial services impact on the intention to use digital financial services	Accepted
4	Trust in digital financial services impact on the intention to use digital financial services	Accepted
5	Technology self-efficacy of digital financial services impact on the intention to use digital financial services	Accepted
6	Digital consumer protection moderates the relationship between usability of financial services and intention to use digital financial services	Accepted
7	Digital consumer protection moderates the relationship between facilitating conditions of financial services and intention to use digital financial services	Rejected
8	Digital consumer protection moderates the relationship between usage experience of financial services and intention to use digital financial services	Rejected
9	Digital consumer protection moderates the relationship between trust in financial services and intention to use digital financial services	Rejected
10	Digital consumer protection moderates the relationship between technology self-efficacy of financial services and intention to use digital financial services	Accepted

5. CONCLUSION

The use of digital financial service has evolved as it has become more assimilated into a country's financial system and in consumers' daily lives. Consumer behavior has drastically changed on account of technology and the information age, which could be both advantageous and unfavorable. Individuals now have extensive access to digital service, including the financial transactions, payments, etc. DFS and mobile phone networks are emerging from standalone to interoperable to increasingly becoming national switches, paving the way for a completely omnipresent payment system. However, they are more likely to expose to digital threat. Digital financial services have grown rapidly over the last decade, which has contributed positively to increase financial inclusion. However, there have been some adverse impact to this advancement, specifically threats relating to consumer protection. The different characteristics of DFS demand related revisions or adjustments to current regulations, in view of the increasing importance of DFS in the markets. Consumer protection still endures as an essential subject for further regulatory concern.

There are major consequences from not providing user protection for digital finance. There might be a competitive threat from new

enterprises, wherein customers access a service for free and pay by giving their data credentials in return. To conclude, usability of financial services, trust, self-efficacy, and consumer protection have a significant impact on the usage of digital financial services. Benefits of DFS include increase level of speed, user experience, security, and trust, and eventually an easy access to an extensive range of financial products; however, it comes with some hurdles as well, which include new forms of online fraud and theft every day, data breaches, and incidents relating to digital security. It is important to consider DFS as incorporating digitization into financial services and integrating most of the population into the financial network will positively contribute to the country's economic growth and development.

REFERENCES

Abdul Halim, N.H.A., Azlan, M.A.M., Nor Adzhar, M.N.A., Hussein, N. (2023), Accelerating digital talent readiness in the Malaysian banking sector: A study on technology adoption through the intention to use customer-focused digital solutions. Information Management and Business Review, 15(1), 164-175.

Agur, I, Soledad, M.P., Celine, R. (2020), Digital Financial Services and the Pandemic: Opportunities and Risks for Emerging and Developing Economies. IMF COVID-19 Special Series. Washington, DC: International Monetary Fund.

Asif, M., Khan, M.N., Tiwari, S., Wani, S.K., Alam, F. (2023), The Impact of fintech and digital financial services on financial inclusion in India. Journal of Risk and Financial Management, 16, 122.

Bhardwaj, N., Kaur, H. (2019), A study on usage of paytm. International Journal for Research in Applied Science and Engineering Technology, 7(5), 562.

Bijlsma, M., Van der Cruijsen, C., Jonker, N., Reijerink, J. (2021), What triggers consumer adoption of CBDC? SSRN Electronic Journal, 4, 1-33.

Billore, S., Billore, G. (2020), Consumption switch at haste: Insights from Indian low-income customers for adopting fintech services due to the pandemic. Transnational Marketing Journal, 8(2), 197-218.

Bongomin, G.O.C., Ntayi, J.M. (2020), Mobile money adoption and usage and financial inclusion: Mediating effect of digital consumer protection. Digital Policy, Regulation and Governance, 22(3), 157-176.

Chen, W.K., Siburian, E.M., Chen, C.W. (2020), The impacts of facilitating and inhibiting factors on usage intention of mobile payment services. International Journal of Applied Science and Engineering, 17(1), 107-120.

Chodorow-Reich, G, Gita, G, Prachi, M, Abhinav, N. (2020), Cash and the economy: Evidence from India's demonetization. Quarterly Journal of Economics, 135(1), 57-103.

Equifax, SIDBI. (2021), Fintech Pulse. Mumbai: Equifax Credit Information Services Private Limited.

George, A., Sunny, P. (2023), Why do people continue using mobile wallets? An empirical analysis amid COVID19 pandemic. Journal of Financial Services Marketing, 28, 807-821.

Ghalandari, K. (2012), The effect of performance expectancy, effort expectancy, social influence and facilitating conditions on acceptance of e-banking services in Iran: The moderating role of age and gender. Middle East Journal of Scientific Research, 12(6), 801-807.

Ghazali, E.M., Mutum, D.S., Chong, J.H., Nguyen, B. (2018), Do consumers want mobile commerce? A closer look at M-shopping and technology adoption in Malaysia. Asia Pacific Journal of Marketing and Logistics, 30(4), 1064-1086.

Graupner, E., Melcher, F., Demers, D., Maedche, A. (2015), Customers' Intention to Use Digital Services in Retail Banking-An Information Processing Perspective. ECIS 2015 Completed Research Papers. Available from: https://aisel.aisnet.org/ecis2015_cr/61

Gupta, M., Taneja, S., Sharma, V., Singh, A., Rupeika-Apoga, R., Jangir, K. (2023), Does previous experience with the unified payments interface (UPI) affect the usage of central bank digital currency (CBDC)? Journal of Risk and Financial Management, 16, 286.

Hermawan, A., Gunardi, A., Sari, L.M. (2022), Intention to use digital finance MSMEs: The impact of financial literacy and financial inclusion. Jurnal Ilmiah Akuntansi dan Bisnis, 17(1), 171-182.

Himel, M.T.A., Ashraf, S., Bappy, T.A., Abir, M.T., Morshed, M.K., Hossain, M.N. (2021), Users' attitude and intention to use mobile financial services in Bangladesh: An empirical study. South Asian Journal of Marketing, 2(1), 72-96.

Himel, T.A., Ashraf, S, Bappy, T.A., Abir, T., Morshed, K., Hossain, N. (2021), Users' attitude and intention to use mobile financial services in Bangladesh: An empirical study. South Asian Journal of Marketing, 2(1), 72-96.

Hossain, M.M., Akter, S., Adnan, H.M. (2022), Does the trust issue impact the intention to use e-wallet technology among students? Journal of Entrepreneurship and Business, 10(1), 57-71.

Hsu, C.L., Wang, C.F., Lin, J.C.C. (2011), Investigating customer adoption behaviours in mobile financial services. International Journal of Mobile Communications, 9(5), 477-94.

Jaiswal, D., Kaushal, V., Mohan, A., Thaichon, P. (2022), Mobile wallets adoption: Pre-and post-adoption dynamics of mobile wallets usage. Marketing Intelligence and Planning, 40(5), 573-588.

Jumardi, J., Pontoh, G., Nirwana, N. (2020), The Effect of Self-Efficacy, Trust, and Lifestyle on Intention to Use Digital Financial Transaction Service. In: Proceedings of the 4th International Conference on Accounting, Management, and Economics, ICAME.

Kafsh, S.Z. (2015), Developing Consumer Adoption Model on Mobile Wallet in Canada. Master's Thesis. Available from: https://ruor.uottawa.ca/bitstream/10393/32391/1/zarrin_kafsh_sanaz_2015_thesis.pdf

Kaur, P., Dhir, A., Singh, N., Sahu, G., Almotairi, M. (2020), An innovation resistance theory perspective on mobile payment. Journal of Retailing and Consumer Services, 55, 102059.

Khan, M.S., Siddiqui, S.H. (2019), SMEs intention towards use and adoption of digital financial services. Sustainable Business and Society in Emerging Economies, 1(2), 65-80.

Khera, P. (2023), Digital Financial Services and Inclusion. Washington, DC: Publications of International Monetary Fund.

Konradt, U., Held, G., Christophersen, T., Nerdinger, F.W. (2012), The role of usability in E-commerce services. International Journal of E-Business Research, 8(4), 57-76.

Kornelis, Y. (2022), Digital banking consumer protection: Developments and challenges. Jurnal Komunikasi Hukum, 8(1), 378-394.

Laukkanen, P., Sinkkonen, S., Laukkanen, T. (2007), Consumer resistance to internet banking: Postponers, opponents and rejectors. The International Journal of Bank Marketing, 26(6), 440-455.

Laurence, S., Candiwan, C. (2020), The role of trust toward continuance usage intention: Of mobile payment with gender as moderation. Jurnal Ilmiah Ekonomi dan Bisnis, 13(1), 64-73.

Le, M.T.H. (2021), Examining factors that boost intention and loyalty to use Fintech post-COVID-19 lockdown as a new normal behaviour. Heliyon, 7, e07821.

Lee, Y.K. (2021), Impacts of digital technostress and digital technology self-efficacy on fintech usage intention of Chinese Gen Z Consumers. Sustainability, 13(9), 5077.

Lichtfous, M., Yadav, V., Fratino, V. (2019), Can blockchain accelerate financial inclusion globally? Inside Magazine Issue. Available from: https://cognizium.io/uploads/resources/file-36385816098.pdf [Last

accessed on 2024 May 29].

Liu, Y., Wang, S., Wang, X. (2011) A usability-centred perspective on intention to use mobile payment. International Journal of Mobile Communications, 9(6), 541-562.

Ludwina, E.P., Dimastuty, H., Despina, W., Yuniarty. (2022), The Influence of Information Quality, System Quality, Service Quality Towards Customer Satisfaction and Trust and their Impact Towards Finpay Money Continuous Use Intention. In: 2022 7th International Conference on Business and Industrial Research (ICBIR). Bangkok, Thailand. p46-50.

Lutfi, A., Al-Okaily, M., Alshirah, M.H., Alshira'h, A.F., Abutaber, T.A., Almarashdah, M.A. (2021), Digital financial inclusion sustainability in Jordanian Context. Sustainability, 13, 6312.

Ma, C., Jin, Z., Mei, Z., Zhou, F., She, X., Huang, J., Liu, D. (2022), Internet of things background: An empirical study on the payment intention of central bank digital currency design. Mobile Information Systems, 2022, 4846372.

Merhi, M., Hone, K., Tarhini, A. (2019), A cross-cultural study of the intention to use mobile banking between Lebanese and British consumers: Extending UTAUT2 with security, privacy and trust. Technology in Society, 59, 101151.

Mohammadi, H. (2015), A study of mobile banking loyalty in Iran. Computers in Human Behavior, 44, 35-47.

Nayanajith, D.A.G, Dissanayake, D.M.R., Weerasiri, R.A.S. (2020), Effect of Facilitating Conditions on Intentions and Actions towards Digital Banking Adoption: A Multivariate Analysis. Available at: http://repository.kln.ac.lk/handle/123456789/22986

Neves, C, Oliveira, T, Santini, F, Gutman, L. (2023), Adoption and use of digital financial services: A meta-analysis of barriers and facilitators. International Journal of Information Management Data Insights, 3(2), 100201.

Miraz, H.M., Saleheen, F., Almunawar, N.M., Sumi, R.F., Hasan, T. (2022), Green, circular, and digital economies as tools for recovery and sustainability, factors affecting on IoT base business management: In Post, Pandemic Period. United States: IGI Global.

OECD. (2020), Financial Consumer Protection Policy Approaches in the Digital Age: Protecting Consumers' Assets, Data and Privacy. Available from: https://www.oecd.org/finance/financial-consumer-protection-policy-approaches-in-the-digital-age.pdf

Poerjoto, J.I., Gui, A., Deniswara, K. (2021), Identifying Factors Affecting the Continuance Usage Intention of Digital Payment Services Among Millennials in Jakarta. In: 2021 25th International Conference on Information Technology (IT). Zabljak, Montenegro. p1-4.

Poongodi, S., Jayanthi, P., Ramya, R. (2021), Users perception towards google pay. Palarch's Journal of Archaeology of Egypt/Egyptology, 18(1), 4821-4825.

Popy, N.N., Bappy, T.A. (2022), Attitude toward social media reviews and restaurant visit intention: A Bangladeshi perspective. South Asian Journal of Business Studies, 11(1), 20-44.

Prima, T., Kagramanto, L., Sunarsono, R. (2022), Consumer legal protection principles of billing mechanism by digital financial service provider: A prescriptive fintech law study in Indonesia. YMER Digital, 21, 148-170.

Putriani, S., Apriani, R. (2022), Impacts of digital technostress and digital technology self-efficacy on intentions to use fintech in Indonesia. Jurnal Reviu Akuntansi Dan Keuangan, 12(1), 210-227.

Rahman, M, Ismail, I, Bahri, S. (2020), Analysing consumer adoption of cashless payment in Malaysia. Digital Business, 1(1), 100004.

Rahman, M.M., Sloan, T. (2017), User adoption of mobile commerce in Bangladesh: integrating perceived risk, perceived cost and personal awareness with TAM. The International Technology Management Review, 6(3), 103-124.

Rauniar, R., Rawski, G., Yang, J., Johnson, B. (2014), Technology acceptance model (tam) and social media usage: An empirical study on Facebook. Journal of Enterprise Information Management, 27(1), 6-30.

Ravikumar, T., Rajesh, R., Krishna, T.A., Haresh, R., Arjun, B.S. (2022), Changing customer mindset in adopting digital financial services during the COVID-19 pandemic: Evidence from India. Banks and Bank Systems, 17(3), 58-75.

Revathy, C., Balaji, P. (2020), Determinants of behavioural intention on e-wallet usage: An empirical examination in amid of covid-19 lockdown period. International Journal of Management (IJM), 11(6), 92-104.

Rupeika-Apoga, R., Bule, L., Petrovska, K. (2022), Digital Transformation of Small and Medium Enterprises: Aspects of Public Support. Journal of Risk and Financial Management, 15, 45.

Sahay, R., Ulric, E.V.M., Amina, L., Purva, K., Sumika, O., Majid, B., Kimberly, B. (2020), "The Promise of Fintech: Financial Inclusion in the Post COVID-19 Era." IMF Departmental Paper 20/09. Washington, DC: International Monetary Fund.

Singh, N., Srivastava, S., Sinha, N. (2017), Consumer preference and satisfaction of M-wallets: A study on North Indian consumers. International Journal of Bank Marketing, 35(6), 944-965.

Sivathanu, B. (2019), Adoption of digital payment systems in the era of demonetization in India: An empirical study. Journal of Science and Technology Policy Management, 10, 143-171.

Sutarso, Y. (2022), The Role of Islamic Religiosity on the Relationship Between Risk, Trust, and Intention to Use Digital Payments During the COVID-19 Pandemic. International Journal of Islamic Economics and Finance, 5, 177-200.

Tarigan, H.A.A., Paulus, D.H. (2020), Protection of Customers for Management of Digital Banking Services (Study at PT. BRI Unit Boyolali). Hang Tuah Law Journal, 3, 170.

Tsai, H.T., Chien, J.L., Tsai, M.T. (2014), The influences of system usability and user satisfaction on continued Internet banking services usage intention: Empirical evidence from Taiwan. Electronic Commerce Research, 14, 137-169.

Wang, M., Chang, Y. (2018), Technology Leadership, Brand Equity, and Customer Loyalty Towards Fintech Service Providers in China. In: Americas Conference on Information Systems 2018: Digital Disruption, AMCIS 2018 (Americas Conference on Information Systems 2018: Digital Disruption, AMCIS 2018). Association for Information Systems.

Yang, M., Mamun, A.A., Mohiuddin, M., Nawi, N.C., Zainol, N.R. (2021), Cashless transactions: A study on intention and adoption of e-Wallets. Sustainability, 13, 831.

Zhang, Q., Khan, S., Cao, M., Khan, S.U. (2023), Factors determining consumer acceptance of NFC mobile payment: An extended mobile technology acceptance model. Sustainability, 15, 3664.

Zhang, T., Huang, Z. (2022), Blockchain and central bank digital currency. ICT Express, 8, 264-270.