International Review of Management and Marketing

ISSN: 2146-4405

available at http: www.econjournals.com

International Review of Management and Marketing, 2024, 14(4), 29-36.

Factors Influencing Employment Opportunities with Salary for People with Disabilities

Nguyen Thi Mo*

Faculty of Economics and Business, Phenikaa University, Hanoi 12116, Vietnam. *Email: mo.nguyenthi@phenikaa-uni.edu.vn

Received: 15 February 2024 **Accepted:** 19 May 2024 **DOI:** https://doi.org/10.32479/irmm.16287

ABSTRACT

People with disabilities (PWDs) are considered one of the largest and most vulnerable communities, easily affected and harmed. As of December 1, 2022, Vietnam has over 7 million PWDs, accounting for more than 7.06% of the population aged 2 and older, with severe and extremely severe disabilities accounting for about 28.9%. Recent domestic studies have focused on creating capital and building working conditions for PWDs. However, there are still many limitations in terms of effectiveness. The number of unemployed PWDs tends to increase, amidst the general difficulties of the economy. The aim of this article is to clarify the factors influencing the employment opportunities with salary for people with disabilities after the Covid-19 pandemic. The authors directly collected data from 225 employed and unemployed PWDs in two major cities, Hanoi and Ho Chi Minh City, from September 2023 to December 2023 through interview methods. Using the Partial Least Squares Structural Equation Modeling (PLS-SEM) technique on SPSS 20 and AMOS 20 software, the results show that factors strongly influencing employment opportunities for PWDs include their level of education and participation in organizations and employment support programs. The study contributes to understanding and implications for policymakers and labor users.

Keywords: Employment Opportunities, Disabilities, Vietnam
JEL Classifications: M12, M51, M52

I. INTRODUCTION

People with disabilities (PWDs) are individuals who have impairments in one or more body parts or suffer from functional limitations, which pose difficulties in labor, daily activities, and education. According to Article 1 of the United Nations Convention on the Rights of Persons with Disabilities, PWDs are understood as "those with long-term physical, mental, intellectual, or sensory impairments which in interaction with various barriers may hinder their full and effective participation in society on an equal basis with others." Currently, the community of PWDs is increasing in numbers due to factors such as traffic accidents, population aging, climate change, or exposure to toxic substances like Agent Orange. PWDs are considered one of the largest and most vulnerable groups, easily affected and harmed. Respecting and ensuring the rights of PWDs is not only a matter of ethics or charity but also contributes to promoting socio-economic development.

Changes in the socio-economic context have created opportunities for many new and interesting jobs suitable for PWDs. However, with the increasing number of individuals in the labor market (Hall and Wilton, 2011; Noel, 1990). However, the PWDs community faces many barriers in accessing job opportunities, which can be: Whether the educational level of a person with a disability affects their employment opportunities (Timmons et al., 2011; Park and Park, 2021; Al-Hendawi et al., 2022; Taubner et al., 2022). Working environment (Ellenkamp et al., 2016; Almalky, 2020; Devine et al., 2021). Transportation assists people with disabilities. Employment support organizations and programs for people with disabilities (Hemphill and Kulik, 2016; Brooke et al., 2018; Almalky, 2020). There are many reasons explaining the persistence of these barriers despite strong policy interventions by countries. The significant efforts of governments to help PWDs gain employment opportunities have been gradually increasing in recent years, but the pace is slow. While the PWD community

This Journal is licensed under a Creative Commons Attribution 4.0 International License

is increasingly present in the labor market and there is ample evidence that the labor market for them still faces many difficulties (Roulstone, 2013).

The Vietnamese government has emphasized that creating employment opportunities for PWDs is a way to integrate them into society. The proportion of PWDs has been increasing in recent years but still remains lower than the general population growth rate. This article will delve into the factors influencing the employment opportunities of PWDs, thereby providing suggestions for policy managers.

2. RESEARCH OVERVIEW AND THEORETICAL BASIS

Theory of self-determination: The theory of self-determination posits that individuals are driven to develop and change by three innate psychological needs (autonomy, competence, and relatedness). The concept of intrinsic motivation, or engagement in activities for their inherent rewards, plays a crucial role in this theory. Accordingly, the theory of self-determination suggests that individuals can be self-determined when their needs for competence, relatedness, and autonomy are met. Self-determination is an important concept in psychology as it plays a vital role in maintaining mental health and subjective well-being. Promoting self-determination is also a valuable and novel approach in working with certain specific population groups, such as individuals with intellectual disabilities.

2.1. Experimental Studies

In recent years, researchers have been interested in employment opportunities for people with disabilities, and empirical studies have been conducted in several countries around the world. From different aspects, the results suggest that the educational level of people with disabilities affects their employment opportunities such as (Timmons et al., 2011), (Park & Park, 2021), (Al-Hendawi et al., 2022)…Or does the working environment of people with disabilities affect their employment opportunities such as (Ellenkamp et al., 2016), (Shishehchi & Banihashem, 2019), (Devine et al., 2021), (Almalky, 2020)…Or does transportation that supports people with disabilities affect their employment opportunities like (Field, Jette, & America, 2007), (Sze & Christensen, 2017), (Ferrari, Berlingerio, Calabrese, & Reades, 2014) (Jill L Bezyak, Sabella, & Gattis, 2017), (Jill Louise Bezyak et al., 2020). And it is possible that organizations and employment support programs for people with disabilities have an impact on their employment opportunities, according to studies such as (van der Torre & Fenger, 2014), (Hemphill & Kulik, 2016), (Brooke et al., 2018), (Almalky, 2020).

2.2. The Level of Education of People with Disabilities Affects Their Employment Opportunities

According to Timmons et al. (2011), a group of people with disabilities was interviewed to examine the factors influencing their employment decisions. The study participants included recent graduates, recruiters, employment support specialists, the individuals with disabilities themselves, and their families. To validate the collected information, the team invited an intellectual disability research expert to participate in the interview, data collection, and evaluation stages. The results showed that education level and family factors strongly influenced their employment opportunities (Timmons et al., 2011).

According to Park and Park (2021), based on a database of nearly 400 people with disabilities in South Korea, the study examined how job characteristics, family factors, psychological factors, and individual capabilities influence their employment opportunities. The results indicated significant differences in education level, social gender, age, welfare benefits, support tools, and family income affecting their employment opportunities (Park and Park, 2021). Psychological and individual capability factors of people with disabilities have higher employment opportunities for those who meet higher standards. Generally, individuals with older age, superior education, lack of welfare support, family support, are

Figure 1: Research model

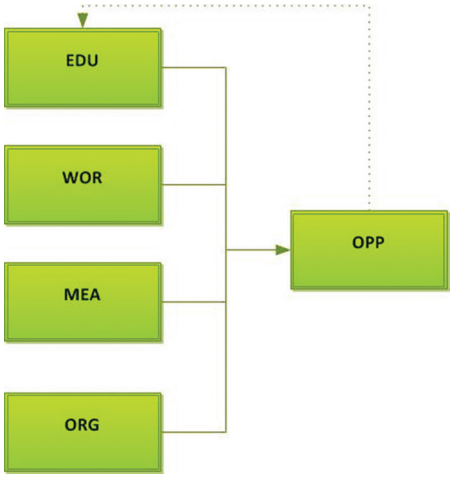

Source: Author builds on theoretical basis

Figure 2: Summary of confirmatory factor analysis

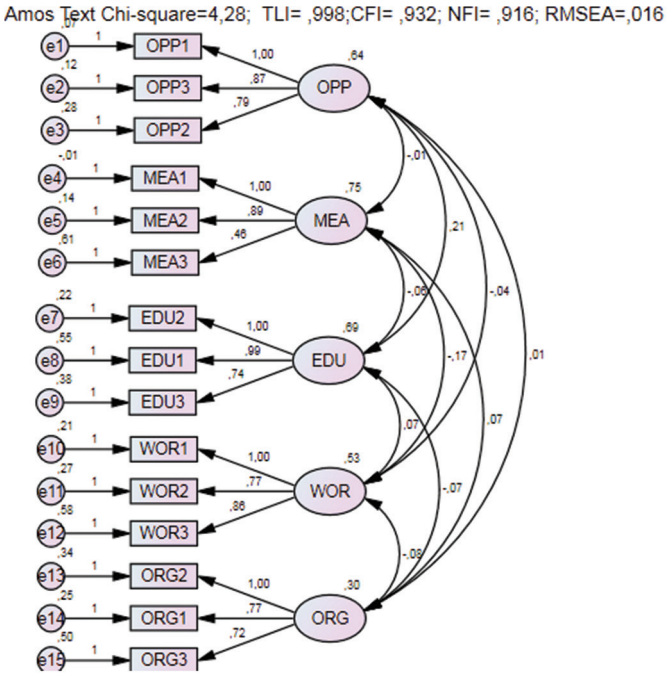

more likely to receive employment opportunities. Additionally, those with transportation means, higher education levels, or higher positions of their parents also have a nonlinear influence. Marriage, lack of social welfare, good family income, family support, are associated with better job opportunities than those without these characteristics.

According to Al-Hendawi et al. (2022), based on the theory of self-determination, scientists explored factors influencing job search methods, barriers to accessing recruitment information, or career decisions and job opportunities of mature people with disabilities in the Gulf Arab region, including Kuwait, Oman, Qatar, and Saudi Arabia. The interview sample size was 15 people with disabilities up to working age. The results showed that personal attributes and environmental factors influenced the employment opportunities of people with disabilities (Al-Hendawi et al., 2022). The new findings are significant for understanding the transition process and self-determination of people with disabilities, as well as for recommendations to improve support services for people with disabilities and their families (Al-Hendawi et al., 2022).

According to Taubner et al. (2022), a gap in previous studies is the lack of satisfactory answers regarding the sustainability of employment for people with disabilities (PWDs). The group surveyed international research works from 2010 to 2020 to precisely determine the sustainability of PWDs' employment and what quantitative studies measure. Databases from important fields such as healthcare, social sciences were screened, and 10 publications were selected for analysis. The results showed that among the 10 articles, 5 used qualitative research and 5 used quantitative research. Four articles defined the sustainability of PWDs' employment, and there was inconsistency in the measurement method. The results can be divided into three types: The proportion of PWDs in long-term employment in the study population, the support people receive, and the barriers to their jobs. There is no consensus on how to define or measure the sustainability of PWDs' employment, making it difficult to compare and draw general conclusions (Taubner et al., 2022).

Similarly, recent research on improving the education level of the workforce has shown that the education level of people with disabilities strongly influences their employment (Peters, 2008; Hanafin et al., 2007; Mikołajewska and Mikołajewski, 2011).

Table 1: Disability characteristics surveyed in the SEM-PLS study model

No.	Characteristics of surveyed disabled individuals	Number of individuals	Percentage
1	Gender		
	Male	130	50.98
	Female	125	49.02
2	Gender		
	18–25 years old	25	11.11
	26–30 years old	51	22.67
	31–35 years old	86	38.22
	36–40 years old	36	16.00
	Over 40 years old	27	12.00
3	Training		
	Primary vocational education or higher	33	14.67
	Not trained	185	82.22
	Currently being trained	7	3.11
4	Type of disability		
	Physical disability	120	53.33
	Hearing impairment	39	17.33
	Intellectual disability	34	15.11
	Visual impairment	32	14.22

Source: Research team synthesized from the investigation process

Table 2: Measurement scale and variables in the PLS-SEM model

No	Code	Internal content of the survey questionnaire catalog	Source
I.	Education level of people with disabilities - EDU		
1.	EDU1	Educational level of people with disabilities	(Hanafin et al., 2007; Peters, 2008; Mikołajewska and Mikołajewski, 2011; Timmons et al., 2011; Park and Park, 2021; Al-Hendawi et al., 2022; Taubner et al., 2022)
2.	EDU2	Labor skills of people with disabilities	
3.	EDU3	Health status of people with disabilities	
II.	Working environment for people with disabilities-WOR		
4.	WOR1	Provided with the best working environment	(Ellenkamp et al., 2016; Shishehchi and Banihashem, 2019; Almalky, 2020; Devine et al., 2021)
5.	WOR2	Prioritized in terms of workspace and working conditions	
6.	WOR3	Equipped with high-tech tools for work	
III.	Means of transportation to support people with disabilities - MEA		
7.	MEA1	Supported with funding to own a personal means of transportation	(Field and Jette, 2007; Sze and Christensen, 2017; Ferrari et al., 2014; Bezyak et al., 2017; Bezyak et al., 2020)
8.	MEA2	Access to public transportation easily	
9.	MEA3	Companies organize transportation for people with disabilities from home to work	
IV.	Organizations and programs to support employment for people with disabilities – ORG		
10.	ORG1	Support provided through organizations, programs, associations, etc., regarding training and job placement	(van der Torre and Fenger, 2014; Hemphill and Kulik, 2016; Brooke et al., 2018; Almalky, 2020)
11.	ORG2	Introduction to job opportunities and employment information	
12.	ORG3	Receive appropriate vocational training for the job	
V.	Employment opportunities for people with disabilities - OPP		
13.	OPP1	Having a stable job with adequate income	Interview with experts
14.	OPP2	The employer has received a job offer but the employee has not yet decided	
15.	OPP3	Currently do not have a job	

Source: Synthesized from theoretical foundation

H1: Education levels positively impact employment opportunities of people with disabilities

2.3. The Work Environment of People with Disabilities Affects Their Employment Opportunities

According to Ellenkamp et al. (2016), individuals with disabilities (PWDs) always value work and employment opportunities as an integral part of their lives. PWDs today often receive lower wages than non-disabled individuals, with income levels ranging from 9% to 40% in different countries, despite clear legal regulations. To validate the study, a compilation of 1932 published articles from the period of 1993-2013 was made. The group screened and finalized a list of 26 articles for evaluation. Criteria for evaluation included factors related to the work environment and job-related factors. The methodology involved reviewing 5 articles that considered the opinions of recruiting companies, 8 articles that examined workplace culture, and 5 articles reviewed by job supporters for PWDs. The results showed very few studies demonstrating fairness in wage practices between non-disabled individuals and PWDs. Additionally, there were not many studies related to the work environment (Ellenkamp et al., 2016).

According to Shishehchi and Banihashem (2019), there is currently a relatively high demand for employment within the PWDs community, but the system for introducing suitable jobs for them is limited (Shishehchi and Banihashem, 2019). Is there a dedicated technological system to address some employment issues for people with disabilities? On this question, the group proposed a job search system, creating gaps in the work environment for PWDs to experience.

According to Devine et al. (2021), there is evidence that employment support programs significantly impact the job search opportunities for people with disabilities (PWDs). With a database of 197 PWDs to assess their views on factors influencing access to paid employment. A large number of respondents reported facing significant barriers in employment opportunities related to educational level, lack of transportation support, job structure, and resources. Unemployed PWDs want more job support from support programs, whereas employed PWDs want support to maintain their jobs. Through a combination of interviews and research, enhancing expertise through employment support programs for PWDs shows certain effectiveness, and it is recommended to develop these models (Devine et al., 2021). PWDs supported by these programs feel confident about their job opportunities, are more ready for work, and find employment through program support. PWDs facing more barriers have fewer job opportunities. Researchers encourage policymakers to reform PWDs support programs to broaden their scope, as broader programs may prevent and address career barriers to support PWDs.

According to Almalky (2020), based on 27 articles published from 1990 to 2020 on the topics of employment, circumstances, income, and quality of life of disabled workers (DWs). Studies were published on Proquest, Ebscohost, Emerald, Google Scholar, and Web of Science. The results indicate that employment for PWDs, when protected and supported, has different impacts on their income and weekly wages received. Employment for PWDs positively impacts their self-esteem, confidence, skill development, and financial independence. Specifically, the employment of individuals provides income and significant contributions to the economy through taxation. However, there is evidence indicating the need to improve employment opportunities for PWDs to enhance productivity and job efficiency. Governments need to focus primarily on increasing employment to protect PWDs and support their employment (Almalky, 2020).

H2: The work environment has a positive impact on the employment opportunities of people with disabilities

2.4. Transportation Support for People with Disabilities Affects Their Employment Opportunities

Most studies suggest that people with disabilities are more likely to find work: (Field and Jette, 2007; Sze and Christensen, 2017; Ferrari et al., 2014; Bezyak et al., 2017; Bezyak et al., 2020). Based on empirical studies, this study suggests the following hypothesis:

H3: Transportation support has a positive impact on the employment opportunities of people with disabilities.

2.5. Organizations, Employment Support Programs for People with Disabilities Affect Their Employment Opportunities

According to van der Torre and Fenger (2014), in employment-targeted policies for people with disabilities, the Netherlands is a pioneer, making significant contributions to legislation aimed at creating employment opportunities for the disabled community (van der Torre and Fenger, 2014). The Dutch government explores innovative methods that sponsoring companies apply to enhance the integration of individuals with disabilities into the labor market. Initiatives leading to increased employment, including providing initial job support for individuals with disabilities, are crucial throughout the process of community integration.

According to Hemphill and Kulik (2016), investigating the decision outcomes of employers to understand the characteristics that make companies most likely to hire people with disabilities (PWDs). The research sample consisted of 87 hiring companies in Southern Australia. The results indicate that hiring companies tend to base their decisions on the past behaviors of PWDs. The barriers or incentives in the decision-making process are mainly strong job support agencies, and concerns about long-term financial issues are significant barriers but can be overcome. Policies mitigating long-term concerns of companies using people with disabilities for the 1st time or rehiring individuals who have previously worked for them are evident (Hemphill and Kulik, 2016). This shows that the role of employment support organizations and programs for PWDs is very important.

According to Brooke et al. (2018), public managers are always interested in vocational rehabilitation programs for people with disabilities (PWDs); however, studies show limitations in programs providing long-term successful support for PWDs. Based on 139 disability profiles tracked in the United States from 2009 to 2017, statistics show that 104 PWDs obtained secured employment in 126 different jobs. Program participants could transition from moderately supported to deeply supported after 18 months of

employment. PWDs employees benefited from continuous assessment and ongoing support from the program, resulting in long-term employment. After the support period of the programs, PWDs employees secured jobs, including job transitions, with high prospects for advancement (Brooke et al., 2018).

According to Almalky (2020), based on 27 papers published from 1990 to 2020 on the topic of employment, circumstances, income, and quality of life of disabled workers (DWs). Studies published on Proquest, Ebscohost, Emerald, Google Scholar, and Web of Science. The results show that employment for PWDs, when protected and supported, has varying impacts on their income and weekly wages. Employment for PWDs positively impacts their self-esteem, confidence, career development, and financial independence. In particular, the jobs of these individuals provide significant income and contribute significantly to the economy through taxation. However, there is evidence showing the need to improve employment opportunities for PWDs to increase productivity and job effectiveness. Governments need to focus primarily on enhancing employment to protect PWDs and support their employment (Almalky, 2020). Based on experimental studies, this study proposes the following hypothesis:

H4: Organizations, employment support programs for people with disabilities affect their employment opportunities.

3. RESEARCH METHODS AND MODELS

The study used the PLS-SEM linear structure model. The objective of validating the PLS-SEM linear structure model clarifies the factors affecting paid employment opportunities of people with disabilities after the Covid-19 pandemic, implemented on SPSS 20 and AMOS 20 software (Arbuckle, 2011).

For optimal results, the authors conducted a validation process including: following Anderson and Gerbing (1988) (Anderson and Gerbing, 1988), the linear structural model analysis process includes: (i) Scale test: Overall Cronbach's alpha coefficient >0.6 and corrected item-total correlation >0.3; (ii) Exploratory Factor Analysis (EFA): Appropriateness of the measure with 0.5≤ Kaiser-Meyer-Olkin (KMO) ≤1, Bartlett's test of sphericity with a significance level (Sig) ≤0.05, factor extraction variance >50%, Eigenvalues >1, factor loadings with a sample size >255 require >0.3 (Hair et al., 2006); (iii) Confirmatory Factor Analysis (CFA): Adjusted Chi-square divided by degrees of freedom (Cmin/Df) ≤5 (Bentler, 1980), Tucker–Lewis Index (TLI) >0.9 (Hu and Bentler, 1998), Comparative Fit Index (CFI) >0.9 (Hu and Bentler, 1998), Comparative Fit Index CFI >0.9 (Hu and Bentler, 1998), Normal Fit Index >0.9 (Hu and Bentler, 1998; Bentler, 1980), Chỉ số RMSEA (Root Mean Square Error Approximation) <0.05 (Browne and Cudeck, 1992); (iv) structural equation modeling (SEM).

The research model is shown in Figure 1, with the following form: OPP = f(EDU, WOR, MEA, ORG); EDU = f(OPP)

All variables in the model are measured using the 5° Linkert scale (Likert, 1932), this takes the form of a series of responses related to the attitude in the questionnaire of the survey and the securities officer will select only one of those answers. Each respondent was given a score reflecting the level of interest (1 was completely no, 2 – disagreed, 3 – neutral, 4 – agreed, 5 – strongly agreed) and corresponding scores could be aggregated to measure the attitude of the respondent.

*Research data. The study directly collected interviews from 225 employed and unemployed PWDs in 2 major cities Hanoi and Ho Chi Minh City in the period from 09/2023 to 12/2023. Data is cleaned before running the model using SPSS 20 and AMOS 20 software

Structure of the survey sample: The research group conducted statistical analysis on an Excel spreadsheet of the survey sample, classifying respondents by age as follows: 130 males (50.98%) and 125 females (49.02%) (Table 1). By age group: there were 25 respondents aged 18-25 (11.11%), 51 respondents aged 26-30 (22.67%), 86 respondents aged 31-35 (38.22%), 36 respondents aged 36-40 (16.00%), and 27 respondents aged over 40 (12.00%). Classifying by educational level, there were 33 respondents with vocational training or higher (14.67%), 185 respondents without any formal education (82.22%), and 7 respondents currently undergoing training (3.11%). Based on disability type, there were 120 respondents with physical disabilities (53.33%), 39 respondents with hearing impairments (17.33%), 34 respondents with intellectual disabilities (15.11%), and 32 respondents with visual impairments (14.22%).

The research data collected is evaluated to accurately reflect the actual structure of the disabled community in Vietnam, with a balanced distribution between male and female disabled individuals. The majority of disabilities are related to mobility, and the educational level of disabled individuals is not particularly high. Based on theory, the authors constructed the following measurement scale in Table 2.

The model constructed consists of 5 scales and 15 observed variables.

4. REGRESSION MODEL TESTING AND DISCUSSION OF RESULTS

4.1. Reliability Analysis of the Scales

Conduct Cronbach's alpha test to assess the quality of the scales. The reliability analysis results of the scales for the variables composing the scales have an alpha coefficient for the overall >0.6 and the corrected item-total correlation >0.3, as detailed in Table 3.

4.2. Exploratory Factor Analysis (EFA)

Since the sample size of 225 falls within the range of 100-350, the chosen Absolute value below is 0.5. The Kaiser-Meyer-Olkin measure of sampling adequacy (KMO) is 0.626, which is within the range of 0.5< KMO <1; Bartlett's test of Sphericity is 0.000; the appropriate factor loading coefficients of observed variables are >0.3; the extracted variance test, Cumulative % coefficient = 75.0% >50%. Therefore, the EFA results meet the requirements (Table 4).

The results of confirmatory factor analysis (CFA) and linear structural model estimation are shown in Figure 2 below:

Table 3: Scale analysis results for variables in the PLS-SEM model

Item-total statistics					
Variable	Scale mean if item deleted	Scale variance if item deleted	Corrected item-total correlation	Squared multiple correlation	Cronbach's alpha if item deleted
EDU1	7.12	2.707	0.660	0.452	0.756
EDU2	7.25	3.015	0.724	0.525	0.677
EDU3	6.89	3.542	0.621	0.401	0.785
Cronbach's alpha=0.811					
WOR1	7.69	2.257	0.671	0.467	0.619
WOR2	7.60	2.634	0.611	0.409	0.697
WOR3	7.89	2.137	0.560	0.319	0.763
Cronbach's alpha=0.771					
MEA1	5.7760	2.130	0.808	0.832	0.591
MEA2	5.9369	2.205	0.774	0.825	0.629
MEA3	5.3281	2.810	0.450	0.211	0.952
Cronbach's alpha=0.814					
ORG1	7.14	1.772	0.450	0.218	0.526
ORG2	7.41	1.420	0.487	0.249	0.456
ORG3	7.35	1.556	0.390	0.153	0.603
Cronbach's alpha=0.722					
OPP1	6.82	2.182	0.863	0.769	0.806
OPP2	6.82	2.456	0.734	0.548	0.918
OPP3	6.72	2.424	0.821	0.729	0.846
Cronbach's alpha=0.816					

Source: Statistics from SPSS 20 software

Table 4: Summary of exploratory factor analysis

KMO and Bartlett's test		
Kaiser-Meyer-Olkin measure of sampling adequacy.		0.626
Bartlett's test of sphericity	Approx. Chi-square	2255.691
	df	105
	Sig.	0.000

Pattern matrix[a]					
Variable	Component				
	1	2	3	4	5
OPP1	0.944				
OPP3	0.910				
OPP2	0.881				
MEA1		0.925			
MEA2		0.902			
MEA3		0.733			
EDU2			0.874		
EDU1			0.873		
EDU3			0.807		
WOR1				0.872	
WOR2				0.833	
WOR3				0.789	
ORG2					0.808
ORG1					0.754
ORG3					0.714

Extraction method: Principal component analysis. Rotation method: Promax with Kaiser Normalization

a. Rotation converged in 5 iterations

Source: Statistics on SPSS 20 software

* Factor analysis confirms CFA and PLS-SEM linear structure

The results of confirmatory factor analysis (CFA) show that the adjusted Chi-square value per degree of freedom (Cmin/df) is 4.28, which falls within the value of ≤5. The Tucker-Levis Index value is 0.998, >0.9, the Comparative Fit Index value is 0.932, >0.9, the Normal Fit Index is 0.916, >0.9, and the Root Mean Square Error Approximation value is 0.016, <0.05. Conclusion: The integrated model fits the actual data well as it meets the testing criteria.

Figure 3: Regression model estimation results

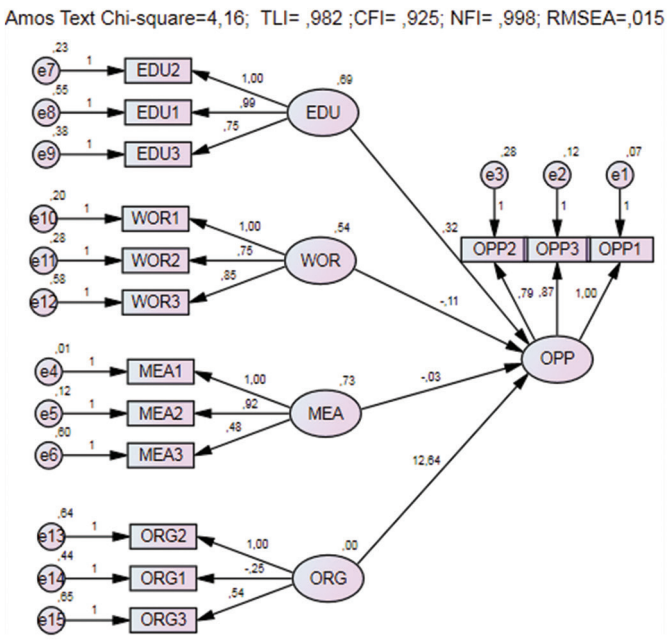

Source: NCS statistics in AMOS 20 software

Figure 3 shows that the adjusted Chi-square value per degree of freedom (Cmin/df) is 4.16, which falls within the value of ≤5, the Tucker-Levis Index value is 0.982, >0.9, the Comparative Fit Index value is 0.925, >0.9, Normal Fit Index is 0.998, >0.9, and the Root Mean square Error Approximation value is 0.015, <0.05. Conclusion: the integrated model fits the actual data well as it meets the testing criteria.

Table 5 with the significance level of the estimation coefficients: P ≤ 0.05; confidence level ≥95%, the factors included in the model are statistically significant and the hypotheses are accepted.

Table 5: Hypothesis testing results

Hypothesis	Impact			Estimate	S.E.	C.R.	P	Label
H1	OPP	<---	EDU	0.319	0.06	5.305	***	Accept
H2	OPP	<---	WOR	−0.114	0.067	−1.699	0.089	Reject
H3	OPP	<---	MEA	−0.034	0.052	−0.642	0.521	Reject
H4	OPP	<---	ORG	1.011	0.048	0.221	0.025	Accept

Source: Statistics on AMOS 20 software

Table 5 shows that the variables Educational Level (EDU) and Organization, Programs Supporting Employment for Persons with Disabilities (ORG) have a positive influence on the variable Employment Opportunities for Persons with Disabilities (OPP) with statistical significance at $P \leq 0.05$. Meanwhile, the variables Work Environment (WOR), Transportation Means Supporting Persons with Disabilities (MEA) did not show statistical significance as their $P > 0.05$. Thus, hypotheses H1 and H4 are supported, while hypotheses H2 and H3 are rejected.

This test result is consistent in Vietnam. Persons with disabilities in Vietnam face challenges in accessing employment due to limitations in educational attainment. The vocational training system related to persons with disabilities in Vietnam still has many limitations in both quantity and quality. Additionally, there are few intermediary organizations, some of which are established but have not been effective in bridging the gap to help persons with disabilities find employment.

5. POLICY IMPLICATIONS FOR MANAGERS

Based on the results of the PLS-SEM regression model, the authors of the paper propose solutions to help persons with disabilities (PWDs) improve their job search abilities, help employers increase access to qualified candidates, assist associations and industries in developing policies supporting persons with disabilities, and aid the government in issuing guidelines and plans tailored to the post-Covid-19 conditions. Specifically: First, individuals with disabilities must recognize the importance of effort and self-affirmation in educational activities, vocational training, and employment. They should integrate into society positively, participate in vocational training activities, enhance professional skills, and engage in associations and programs organized by management agencies or organizations to increase employment opportunities. For those who have succeeded, there should be methods to support community integration and job search.

Second, for employers, creating conditions for persons with disabilities to assert themselves and their professional capabilities in the workplace will also address societal employment issues. Employers need to collaborate with management agencies in vocational training and education for persons with disabilities. Establishing access portals and providing employment services for persons with disabilities are essential.

Third, for associations and organizations of persons with disabilities, actively developing employment support programs for persons with disabilities and establishing small groups to strengthen the association's activities are crucial. Enhancing the intermediary role in job placement for persons with disabilities more effectively and specifically is necessary.

Fourth, for state management agencies, collaboration with employers, disability associations to build databases of persons with disabilities, review and support in-depth vocational training for persons with disabilities, establish and develop specific employment support programs, incentives, and support for persons with disabilities at the provincial, regional, and local levels are essential. Policies such as tax exemptions, tax support, credit provision, or other financial instruments for relevant organizations, associations, and entities related to persons with disabilities should be implemented to create conditions for these organizations to develop on a larger scale.

6. CONCLUSION

People with disabilities are a part of the labor force in society, but they are vulnerable people, so they need to be socialized. help researchers or other relevant entities. The article reviews the underlying theory and rationale as well as empirical studies on paid employment opportunities for people with disabilities. The author has posed hypotheses and proven them through the PLS-SEM linear structural model. The empirical research model that the author of the article uses to analyze research results such as the reliability of the scale, Exploratory Factor Analysis (EFA), Confirmatory Factor Analysis (CFA), Analysis linear structural analysis (SEM). The results show that 2 hypotheses are accepted, 2 hypotheses are rejected. The factors educational level (EDU) and employment support organizations and programs for people with disabilities (ORG) have a positive influence on the variable Employment opportunities for people with disabilities (OPP) with statistical significance P -value<=0.05. Meanwhile, the variables Working Environment (WOR), Transportation Support for People with Disabilities (MEA) and are not statistically significant due to P-value>0.05.

From the research results, the author of the article proposes solutions to improve the ability to find job opportunities, help employers increase access to good candidates, and help associations and industries develop policies. Support people with disabilities, help the Government promulgate orientations and plans suitable to new conditions after the Covid-19 pandemic. Solutions such as: individuals with disabilities must determine their efforts and assert themselves in study, vocational training, and work activities. For employers, it is necessary to create conditions for people with disabilities to assert themselves and their professional abilities at work and at the same time solve employment problems for society. In addition, employers need to coordinate with management agencies in vocational training and training for people with

disabilities. Build accessible information portals and provide employment services for people with disabilities. For associations and associations of people with disabilities, it is necessary to actively develop employment support programs for people with disabilities. For state management agencies. It is necessary to coordinate with employers and disability associations to build a database of people with disabilities and review. However, the article's research limitation is that it has not expanded to a wide geographical area. In the near future, the author will conduct research to address the above issues.

REFERENCES

Al-Hendawi, M., Thoma, C.A., Habeeb, H., Khair, M.S. (2022), Emerging themes on factors influencing career and employment decisions: Voices of individuals with disabilities from four Gulf countries. Social Sciences, 11(8), 371.

Almalky, H.A. (2020), Employment outcomes for individuals with intellectual and developmental disabilities: A literature review. Children and Youth Services Review, 109, 104656.

Anderson, J.C., Gerbing, D.W. (1988), Structural equation modeling in practice: A review and recommended two-step approach. Psychological Bulletin, 103(3), 411-423.

Arbuckle, J.L. (2011), IBM SPSS Amos 20 User's Guide. Amos Development Corporation. United States: SPSS Inc. p226-229.

Bentler, P.M. (1980), Multivariate analysis with latent variables: Causal modeling. Annual Review of Psychology, 31(1), 419-456.

Bezyak, J.L., Sabella, S., Hammel, J., McDonald, K., Jones, R.A., Barton, D. (2020), Community participation and public transportation barriers experienced by people with disabilities. Disability and Rehabilitation, 42(23), 3275-3283.

Bezyak, J.L., Sabella, S.A., Gattis, R.H. (2017), Public transportation: An investigation of barriers for people with disabilities. Journal of Disability Policy Studies, 28(1), 52-60.

Brooke, V., Brooke, A.M., Schall, C., Wehman, P., McDonough, J., Thompson, K., Smith, J. (2018), Employees with autism spectrum disorder achieving long-term employment success: A retrospective review of employment retention and intervention. Research and Practice for Persons with Severe Disabilities, 43(3), 181-193.

Browne, M.W., Cudeck, R. (1992), Alternative ways of assessing model fit. Sociological Methods and Research, 21(2), 230-258.

Devine, A., Shields, M., Dimov, S., Dickinson, H., Vaughan, C., Bentley, R., Kavanagh, A. (2021), Australia's disability employment services program: Participant perspectives on factors influencing access to work. International Journal of Environmental Research and Public Health, 18(21), 11485.

Ellenkamp, J.J., Brouwers, E.P., Embregts, P.J., Joosen, M.C., Van Weeghel, J. (2016), Work environment-related factors in obtaining and maintaining work in a competitive employment setting for employees with intellectual disabilities: A systematic review. Journal of Occupational Rehabilitation, 26, 56-69.

Ferrari, L., Berlingerio, M., Calabrese, F., Reades, J. (2014), Improving the accessibility of urban transportation networks for people with disabilities. Transportation Research Part C: Emerging Technologies, 45, 27-40.

Field, M.J., Jette, A.M. (2007), Transportation patterns and problems of people with disabilities. In: The Future of Disability in America. United States: National Academies Press.

Hair, J.F., Black, W.C., Babin, B.J., Anderson, R.E., Tatham, R.L. (2006), Multivariate data analysis. In: Humans: Critique and Reformulation. 6th ed. New Jersey: Pearson Prentice Hall.

Hall, E., Wilton, R. (2011), Alternative spaces of 'work' and inclusion for disabled people. Disability and Society, 26(7), 867-880.

Hanafin, J., Shevlin, M., Kenny, M., Neela, E.M. (2007), Including young people with disabilities: Assessment challenges in higher education. Higher Education, 54, 435-448.

Hemphill, E., Kulik, C.T. (2016), Which employers offer hope for mainstream job opportunities for disabled people? Social Policy and Society, 15(4), 537-554.

Hu, L.T., Bentler, P.M. (1998), Fit indices in covariance structure modeling: Sensitivity to underparameterized model misspecification. Psychological Methods, 3(4), 424.

Likert, R. (1932), A technique for the measurement of attitudes. Archives of Psychology, 22(140), 55..

Mikołajewska, E., Mikołajewski, D. (2011), E-learning in the education of people with disabilities. Advances in Clinical and Experimental Medicine, 20(1), 103-109.

Noel, R.T. (1990), Employing the disabled: A how and why approach. Training and Development Journal, 44(8), 26-32.

Park, J.Y., Park, E.Y. (2021), Factors affecting the acquisition and retention of employment among individuals with intellectual disabilities. International Journal of Developmental Disabilities, 67(3), 188-201.

Peters, S.J. (2008), Inequalities in education for people with disabilities. In: Inequality in Education: Comparative and International Perspectives. Germany: Springer. p149-171.

Roulstone, A. (2013), Disabled people, work and employment: A global perspective. In: Routledge Handbook of Disability Studies. United Kingdom: Routledge. p222-235

Shishehchi, S., Banihashem, S.Y. (2019), Jrdp: A job recommender system based on ontology for disabled people. International Journal of Technology and Human Interaction, 15(1), 85-99.

Sze, N.N., Christensen, K.M. (2017), Access to urban transportation system for individuals with disabilities. IATSS Research, 41(2), 66-73.

Taubner, H., Tideman, M., Staland Nyman, C. (2022), Employment sustainability for people with intellectual disability: A systematic review. Journal of occupational rehabilitation, 32(3), 353-364.

Timmons, J.C., Hall, A.C., Bose, J., Wolfe, A., Winsor, J. (2011), Choosing employment: Factors that impact employment decisions for individuals with intellectual disability. Intellectual and Developmental Disabilities, 49(4), 285-299.

Van der Torre, L., Fenger, M. (2014), Policy innovations for including disabled people in the labour market: A study of innovative practices of dutch sheltered work companies. International Social Security Review, 67(2), 67-84.