International Review of Management and Marketing

ISSN: 2146-4405

available at http: www.econjournals.com

International Review of Management and Marketing, 2022, 12(6), 77-88.

A Consumer's Perspective of the Clover Tropika Brand: Building Brand Extensions by Leveraging the Parent Brand's Reputation

Phethokuhle Madlala[1], Abigail Chivandi[1], Eugine Tafadzwa Maziriri[2]*

[1]School of Economic and Business Sciences, University of the Witwatersrand, Johannesburg, South Africa, [2]Department of Business Management, College of Business and Economics, University of Johannesburg, South Africa. *Email: euginem@uj.ac.za

Received: 03 August 2022 **Accepted:** 07 November 2022 **DOI:** https://doi.org/10.32479/irmm.13441

ABSTRACT

The primary objective of the study was to investigate how brand extensions can leverage on the parent brand image in order to achieve a positive brand extension perception. This was investigated in accordance with specific brand building constructs. The study focused on a consumers' perspective of the Clover Tropika brand within emerging economic areas. The research was based on a quantitative approach which adopted convenience sampling at Mall intercepts. A total sample of 238 consumers responded to a self-administered questionnaire at Southgate and Maponya Mall which are located in the south west of Johannesburg. All respondents were above the age of 18 and consented to participate in the research by willingly placing their completed questionnaires in the box provided on the day. The data techniques used included Structural Equation Modelling (SEM) which had a core focus on Confirmatory Factor Analysis (CFA) which assisted in confirming the relationships proposed in the conceptual model. SEM also focused on path modelling to determine the causal relations. Nine out of the ten hypotheses proposed had a significant level of $P < 0.001$ proving support for the proposed hypotheses. The research found that there is a significant relationship between brand awareness and brand attitudes, as this hypothesis had the highest path coefficient score after the research was conducted. It was noted that high recall and recognition of the parent brand, accompanied by favorable attitudes, are key factors in leveraging on the parent brand image to build brand extensions. Moreover, brand extensions need to have high perceived fit in order to leverage extensively on the parent brand image.

Keywords: Attitude towards Street Food, Subjective Norms, Past Behaviour, Food Safety Concerns, Patronage Intention, Actual Patronage
JEL Classifications: M10, M16, M31

1. INTRODUCTION

Branding has always been an intrinsic phenomenon in markets across the global sphere (Keller, 2013). Companies have valued the concept of branding in such a way that almost every product is a brand. There are so many brands that consumers find it difficult to pick one product in a specific category (Keller, 2013). It is therefore important that companies create brands that stand out and have a high value perception to consumers (Madlala, 2019). From the inception of a brand, the brand undergoes a lifecycle which consists of the product development stage, the market introductory stage, the growth stage, and the maturity stage, lastly the decline or renewal stage is evident in the product lifecycle (Weinswig, 2015). Many brands that have reached the life cycle maturity stage also known as the peak stage opt for renewal or brand extensions in order to keep the product offering relevant or entice new market segments (Cutrona et al., 2016). With emerging economic markets, brands must stay relevant through tailored communications and new product concepts that are country specific in order to meet consumers' ever-changing needs. A key tactic in this discipline is brand extension strategy. A brand extension can be defined as a tactical marketing strategy used to launch a new product using a brand that currently exists (Hariri and Vazifehdust, 2011). This tactical strategy has now become the cornerstone for growth. The brand that has existed for a long time, and has reached its' maturity stage is used to launch the brand extension, this long term brand is

This Journal is licensed under a Creative Commons Attribution 4.0 International License

also referred to as the parent brand (Kang, 2015). Brand extensions are used to launch new innovation due to a number of financially viable considerations; low start-up costs, transferability of brand equity and high consumer persuasion (Boisvert, 2016). When considering the brand extension strategy, there are existing brand characteristics that can be adopted and transferred from the core or existing brand, for the purpose of the research referred to as the parent brand. The adoption and transferability depends on the relevance of the extension when compared to the parent brand as well as the consumers' perception of the new product (Kotler, 2001).

In this process, it is consequential that marketers ensure that the new product has a place to exist in the market (French and Smith, 2013). Key in understanding parent brand image and brand extensions is brand equity, in particular Consumer Based-Brand Equity (CBBE). CBBE is the fuel that enables the two variables to co-exist as it deals with building "a set of assets" that corelates with the core brand and makes it superior in the eyes of the consumer (Sharma, 2017). Brands with high equity are shown to have consumers that are brand loyal and have slimmer chances of switching to competitors, these high equity brands also have high chances of creating successful brand extensions (Aaker, 1991). This study will focus on Keller's Consumer Based-Brand Equity model. This study evaluates core constructs of brand equity which include brand awareness and brand associations (Aaker, 1991; Keller, 2013). Brand awareness also known as brand salience is included as a pre-determinant of brand associations and brand attitudes which fall under consumer judgements and feelings within Keller's brand equity pyramid (Keller, 2013). Brand awareness is represented in the equity model through brand salience, together these refer to the ability of the consumer to recall and recognize key brand elements or the ability of a brands saliency in the mind of the consumer (Keller, 2013). With awareness being a primary brand identifier, this was included in the research as an independent variable. Variables influencing the outcome were identified as brand attitudes and brand associations. Brand attitudes are the favourable and unfavourable thoughts or judgements that a consumer feels about a brand (Ghorban, 2012). Brand associations are links that the consumer makes based on brand attributes that they have been exposed to (Roux and Maree, 2016).

While innovating by extending the core brand is key, new products still need to cater to consumer demands and current consumer trends (Madlala, 2019). The purpose of the study is to investigate the concept of levering on the parent brand image to build brand extensions, as well as to provide an overview of brand management related academic fundamentals.

2. RESEARCH CONTEXT

This study is written in the context of Clover Topika, focusing on leveraging the parent brand to build brand extensions. In this case Clover is the parent brand and Tropika is the brand 7 extension. There are numerous brands that have used the brand extension strategy by leveraging on the parent brand, these brands include the likes of Coca-cola who in 1982 extended into Diet Coke, with no calories, responding to a new consumer need of the health conscious consumer (Madlala, 2019). Nestle also expanded from wheat-and-milk baby focused food into extensions and growth opportunities in condensed milk and milk chocolate, of which these brand extensions are now at maturity stage and include examples such as Kitkat (Weinswig, 2015). Numerous studies on parent brand and brand extensions have been conducted (Afzal, 2013; Madlala, 2019). These however look at various industries such as the motor industry and private label with a focus on global brands. The research in question focuses on a local brand with high brand equity, in this case, Clover. The paper focuses on key brand equity constructs which include brand awareness and brand associations. The paper also looks at brand attitudes, with consumer perception being a key integral part of brand building and evaluating whether the desired brand image has been achieved in the mind of the consumer. The basis of the research is underlined within three theories and models namely, the consumer based brand equity model, the self-congruency theory and the attachment theory.

2.1. Clover

Known as the Butter and Diary Company, Clover is a long-standing brand in South Africa. Cover's brand identity dates from 1994 where the iconic red and blue colours become significant to the milk company, the symbol became high recognisable, and the "Way Better" slogan was a stance for quality dairy products (Clover website, 2018). According to Grassie "Clover is a FastMoving Consumer Goods (FMCG) company which is the largest dairy company in South Africa and has about 400 of their own branded products available on the market that is produced and packaged in their factories"(Grassie, 2009. p. 2). The company was listed on the 14th of December 2010 and has the vision "to be one of the leading branded foods and beverages group in South Africa and other African countries, providing accessible nutrition to all consumers" (Clover Annual Report, 2016. p. 10). The Clover brand started in 1898 and therefore has a rich culture and heritage within the South African landscape. Clover is unique because it has a corporate brand identity, and a product brand identity at the same time, utilising brand equity to its fullest form. The brand has unique brand elements, such as the three-leaf spade logo, the colours blue and red, as well as the slogan "Way Better." Clover has a wide range of products, ranging from different categories such as dairy fluids, concentrated products, Non-alcoholic 8 beverages, etc. Non-alcoholic beverages contributed 26% to Clovers total sales in 2016 (Clover Annual Report, 2016). One of the company's core strategies is to develop new products and to enter new markets outside South Africa, namely, Botswana, Lesotho, Namibia, Mozambique, Angola and Nigeria (Madlala, 2019). The Group Chief Creative Officer of Joe Public, one of Clover's communication agencies, stated that Gaining market share in premium segment, particularly in milk, is a challenging task due to aggressive price wars and cash strapped consumers (Madlala, 2019).

2.2. Tropika-Dairy Fruit Mix

Tropika is a versatile brand that is made up of different types of products within the same category. Though the brand falls under non-alcoholic beverages, it does occupy a unique category; Dairy Fruit mix, where Tropika holds 98.7% market share (Nielsen data, 2016). The brand has two sub-categories, Tropika Fresh and Tropika UHT. The Tropika fresh category is made up of different flavours, including orange, pineapple, and mango, tropical, peach and cool red berry (Clover, 2017). The brand is a true epitome of a brand extension that

has innovated, utilising and maximising on the parent brand image, in this case, Clover. The latest category extension is Tropika Slenda. Tropika Slenda has focused and catered to the trend of health and wellness, as identified by branding trends 2020 (Faganel and Janeš, 2015). The drink has no added sugar in it, being relevant to the most contested South African macroeconomic trend, sugar tax (News 24, 2017). The new Tropika Slenda has a twist of flavours, creating newness in the distinct dairy fruit mix category (Clover, 2017). The Tropika brand was voted "product of the year" by the consumer survey of product innovation (Clover Annual Report, 2016). The brand has many associations linked to it, the popular Tropika Island of Treasure, which now has seven successful seasons behind it (Clover, 2017). The Brand also has the tag "nothing smoother," recently adopted to appeal more to the consumer (Madlala, 2019).

2.3. Problem Statement

A brand needs to provide excitement, be constantly innovative and be consistent with the current trends of a specific location (Anwar et al., 2011). Companies have taken the route of utilising an existing brand name to create new lines, whether it is product line extensions, or brand extensions. This process is said to reduce the costs of launching a completely new product with its' own brand elements (Keller, 2013). Studies have evaluated positive and negative impacts of brand extensions (Martinez and Pina, 2003). Brand extensions have thus been studied in relation to perceived fit, whether the brand extension retains the reputation of the parent brand image (Hameed et al., 2014). Studies have been conducted on beverages, 10 cosmetics, social media, appliances (Ghobarn and Madani, 2012; Roux and Maree, 2016). Studies pertaining to the Clover Tropika Brand, a successful South African Brand, have not yet been explored. Furthermore, minimal studies have been conducted in this context, researching emerging economic areas. Emerging economy studies tend to be more numeric, statistical reporting and GDP growth (Madlala, 2019) related whilst this study focuses more on how the consumer thinks and interprets continuity information provided to them by the brand.

2.4. Conceptual Model

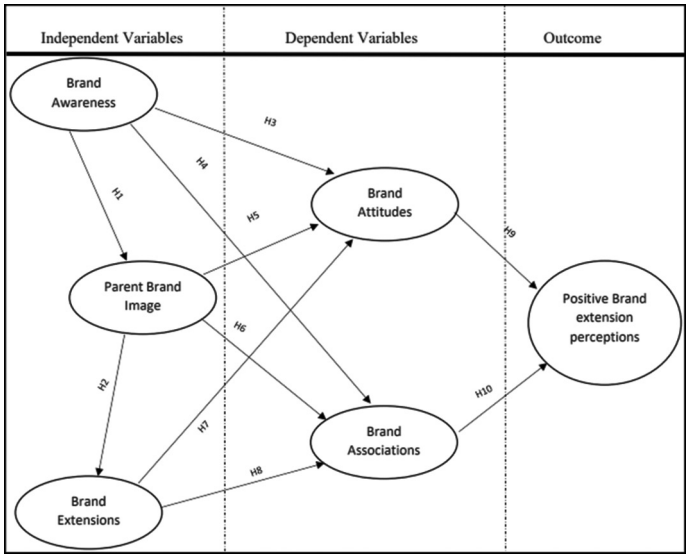

2.5. Brand Awareness and Parent Brand Image

Mounting empirical academic evidence demonstrates that brand awareness plays a vital role in the parent brand image being recognised by the consumer. Brand awareness is the ability of the consumer to recall and recognise a brand (Keller, 2013). The parent brand image is how the consumer views the brand, the consumer therefore needs to be aware of the brand prior to a brand image forming. The relation of the variables is justified through the consumer basedbrand equity model where brand saliency, also known as brand image is represented in Kellers' model (Keller, 2013; Aaker, 1991). In Rizwan and Xian's research, they tested the extent to Brand Awareness Parent Brand Image Brand Extensions Brand Attitudes Brand Associations Positive Brand extension perceptions which consumers knew about the Starbucks brand (Brand awareness) and the type of perception they had of the brand (brand image) (Rizwan and Xian, 2008). In the study, it was concluded that there are in fact, different levels of awareness, and certain awareness relies on brand cues, e.g. brand name, which are formed through in the brand image. Vyas and Brahmbhatt further support this in their study conducted in India, by revealing that brand awareness is low when there is unaided recall (Vyas and Brahmbhatt, 2016). Much research also states that brand awareness, aided by brand elements which create brand image, is necessary in creating customer-based brand equity (Rizwan and Xian, 2008; Vyas and Brahmbhatt, 2016; Schmit, 2012; Ghobarni and Madani, 2011). Ghobarni makes further reference to why brand awareness is important for the parent brand imagery by highlighting that beliefs, feelings or attitudes towards the parent brand will be transferred to the extension and the greater the quality of the original brand or parent brand the greater the positive effect on the extension (Ghobarni and Madani, 2011). Researchers further emphasise that brand awareness is a key component in brand equity; it ensures that potential customers have key knowledge regarding the attributes of a brand (Romanuik et al., 2004). Drawing from the theoretical points and the empirical literature represented in chapter 2, there is a clear link between brand awareness and parent brand image–this has been justified through brand equity measures making links between brand building and consumer perception. This study therefore builds a hypothesis that draws on the awareness and image relationship, as demonstrated in H1, the hypothesis states that brand awareness has a positive impact on the parent brand image.

H1: Brand awareness has a positive impact on the parent brand image.

2.6. Parent Brand Image and Brand Extensions

Brand awareness has been studied in terms of the first brand created by any company, in this case, the parent brand. Through well-established brand awareness, companies use the opportunity to grow their markets using a brand extension strategy (Perera, 2013). Consumers become aware of a brand through a process called identification. Through this process, a consumer identifies the brand and the product classification where the brand fits (Schmitt, 2012). Recent empirical research done by Ghorbani and Madani (2012) references the FMCG McDonalds brand. The McDonald brand is used in Ghorbani and Madani's (2012) study, stating that through the brand awareness of the McDonald brand, the brand extended the name into a coffee shop McCafe (Ghorbani and Madani, 2012). The study aimed to investigate loyalty, 38 awareness, quality and product fit between the core brand image awareness versus the brand extension. Through this research,

the importance of the parent brand, high brand awareness and brand extension fit is noted. Previous research has also evaluated what effect a brand extension can have on the parent brand. Ghorbani and Madani (2012) conducted another study for home appliances in Iran which demonstrated that the attitude toward the brand extension affects the parent brand image positively. This demonstrates the interrelation between the constructs. Further researchers advocating for brand extension using an existing brand, mention how using the equity of the parent brand can be a recipe for a successful innovation. A study done in Slovenia demonstrates a positive reaction of the brand extension strategy using the equity of the parent brand. The study further concluded that longevity of the parent brand and differentiation for the brand extension is key (Vukasovic, 2012). Lastly, in Le, Cheng, Lee and Jains' research, they conclude that "consumers find higher brand personality transfer when a direct naming strategy is applied or when the parent brand extends to a high perceived fit product" (Le et al., 2012). Opposing the above literature was well known researchers' statement, hypothesising that brand extensions have a negative influence on the core brand, also referred to as the parent brand (Martinez and Pina, 2003). Further critics conclude that the brand extension affects the parent brand negatively depending on product fit, they further state that the quality perception of the brand extension needs to be higher than that of the parent brand (Arslan and Altuna, 2010). This particular research focuses on the brand extension being an independent variable Assumptions from the empirical research take the positive notion, hypothesising that the parent brand image has a positive effect on the brand extension, which justifies leveraging on parent brand key attributes.

H2: Parent brand image has a positive impact on brand extensions

2.7. Brand Awareness and Brand Attitudes

There is a direct link between brand awareness and brand attitudes, the link between the two is driven by brand attitudes. Zhang states that "brand image is a key driver of brand equity, which refers to the consumers' general perception and feeling about a brand and has an influence on consumer behaviour" (Zhang, 2015. p. 58).This therefore does not exist without some form of awareness; Schmitt (2012) supports this statement by exploring multi-sensory perceptions, stating that brands provide various stimuli to the consumer through "sight, sound, touch and 39 taste"; he continues to say that even though brands can try and shape attitudes through messages processed via billboards, television and print, consumers can use interpret the message in a different manner (Schmitt, 2012). A number of studies look at awareness and consumer attitudes with a link to purchase intention, proving that the two are interrelated constructs (Wu and Lo, 2009; Wu and Lo, 2015; Zhang 2015). Other studies have also looked at brand image and consumer attitudes in relation to customer satisfaction and consumer-based brand equity (Bivainiene and Sliburyte, 2008; Chien-Hsuing, 2011). From the relations mentioned above, brands are initial drivers to providing cues to the consumers; this can also be referred to as encoding, the consumers then read these cues or messages from the brand and make their own interpretation by decoding. These interpretations are then formed into brand attitudes. There is a direct link between brand awareness which are cues controlled by the brand but informed by the consumer; these cues then allow consumers to form an opinion about the brand, this then relates back to brand attitudes. If the cues are placed in a manner that is favourable for the brand, the consumer then forms positive attitudes about the brand therefore, brand awareness has a positive impact on brand attitudes.

H3: Brand awareness has a positive impact on brand attitudes.

2.8. Brand Awareness and Brand Associations

It is essential to note the important impact that brand awareness has on brand association. Aaker (1991) elucidates that brand image could be a set of associations which are significant to the consumers (Aaker, 1991). Brand awareness is created by on-going visibility (Severi and Ling, 2013). Schmitt (2012) posits that, "brand awareness is an important memory-based categorization task in which recalls a specific brand name when presented with the category" (Schmitt, 2012. p. 9). Therefore, the concept of recall and recognition become an integral basis to establish brand awareness. These elements or subtle variables can be created through brand associations (Severi and Ling, 2013). The concept of brand awareness and the concept of brand association are integral elements of brand knowledge. Researchers have further examined how consumers ascribe information store brand knowledge as abstract and stale brand association in semantic memory (Wallpach and Kreuzer, 2012). Both components, awareness and associations, are linked with associative models of memory in the field of consumer psychology. The study of brand awareness and brand associations are both linked to brand knowledge, a subsidiary of brand equity. Keller states that brand awareness is related to the strength of the 40 trace in memory, this is evident through the consumer's ability to recognise the brand in various environments (Keller, 2013). To create brand awareness, marketers need to have a brand image. In Perera and Dissanayake's study, the authors make a link between brand awareness, brand association and perceived quality as key drivers of a consumers' purchasing decision (Perera and Dissanayake, 2013). In recent research, Pather (2017) elaborates that "association networks make up a brand's image, the brand identity, its uniqueness and value to the customer" (Pather, 2017). Drawing from the foregoing discussion, this study therefore proposes that brand awareness and brand associations are key constructs of brand knowledge, both constructs need to toil congruently to have a stable establishment in the consumers' mind. The one construct can-not exist without the other, with awareness being a key primary measure and association unable to exist independently of recall and recognition, therefore the hypothesis stands as brand awareness having a positive impact on brand associations.

H4: Brand awareness has a positive impact on brand associations.

2.9. Parent Brand Image and Brand Attitudes

It is of significance to assess the nexus that exists between parent brand image and brand attitudes. Brand attitude is one of the strongest ways to establish the relationship between consumers and a brand (Anwar et al., 2011). Aaker and Keller emphasise the relationship between perceived quality, the parent brand image and how these influence the attitude towards the brand extensions (Aaker and Keller, 1990). Researchers have further emphasized the importance of encouraging a favourable brand image for its core (Martinez et al., 2008). A favourable image is composed of the way

the consumer feels about a brand, hence reference to consumer attitudes about a brand. Based on associations, authors state that brand image and brand extensions are interlinked to how the consumer feels about the parent brand, and then later on, the brand extension (Ghordani and Madani, 2012). Established authors have defined brand image as recognisable associations about the brand made by consumers, consumers then derive an attitude/perception based on brand associations (Hseih et al., 2004). Furthermore according to Martinez et al., (2008) there are multidimensional and interrelated concepts within brand associations, namely brand image, perceived quality and brand attitude. Concluding from the elucidations aforementioned, one can see that there is a relationship between the parent brand image and brand attitudes. When consumers have favourable attitudes towards the parent brand image, brand managers are advised to leverage that advantage.

H5: The parent brand image has a positive impact on brand attitudes.

2.10. Parent Brand Image and Brand Association

Perera (2013) once discussed parent brand image and brand association. In this study, it is vital that the researcher examine the two congruent variables. For a brand extension to be successful or favourable in the consumers' mind, it needs to have a good perceived fit in the consumers' mind (Perera, 2013). The fit or congruency of the parent brand image and the brand extension is built through the associations or links that the consumer has between the parent brand and the brand extension (Ghorbani and Madani, 2012). Mirzai et al., (2016) relates brand image to the way in which a consumer perceives a brand or product, he later goes on to say that brand image can be broken down into types of brand associations, favourability of brand associations, strength of brand association and uniqueness of brand association, these brand associations are components of building brand image and influence or building consumer attitudes (Mirzai et al., 2016). Consumer attitudes are developed over time through experiences, once these are learned the consumer's behaviours is influenced (Le Roux and Maree, 2016). Deducing from the aforementioned, the parent brand image requires attaining positive and favorable attitudes in order to leverage brand equity in the new products.

H6: The parent brand image has a positive impact brand association.

2.11. Brand Extensions and Brand Attitudes

When brand managers consider brand extensions, they also consider how the strategy will be received by consumers. Many researchers have evaluated how brand extensions are accepted by consumers (Hameed et al., 2014). When relating the two brand extensions and brand attitudes, these two concepts are linked to the study of perceived fit. Perceived fit is evaluated by the consumers' perception of the association between the brand extension and the parent brand image (Chung, 2014). This association is influenced by the consumers' primary attitude about the parent brand, which is then transferred to the extension based on the new product, new attributes and new benefits of the extension. Ghorbani and Madan (2012) refer to perceived fit and how consumers are under the impression that brand extensions to unassociated categories cannot be seen as reliable because the trust and functionality of the brand cannot be transferred (Ghorbani and Madani, 2012). Though researchers probe that there needs to be a link between the parent brand and the brand extension in order for consumers to patently have favourable attitudes towards the new item, other researchers disagree. In Kang's (2015) research, he opted for the conclusion that successful brand extensions are not always compatible with the parent brand, this however does not mean that the brand extension will be a failure. Kang further iterated that the extension brand can succeed in markets if the parent brand's image and the consumers' self-image have a link towards one another (Kang, 2015). In light of the above, this study posits that the success of a brand extension is influenced by consumers' attitudes toward the existing brand, thus brand managers must assert the transfer of positive attitudes. This must be asserted beginning with the parent brand and ending with the brand extension.

H7: Brand extensions have a positive impact on brand attitudes.

2.12. Brand Extensions and Brand Associations

Brand extensions can be identified as indicators of brand association. Once a brand extension strategy is implemented, consumers' make new associations with the overall brand (Moons and De Pelsmacker, 2012). A brand extension, whether horizontal or vertical, will have different characteristics and attributes, therefore creating new associations. Brand extension are developed for different objectives, namely, to increase penetration of current markets or to attract new segments to the brand (Keller, 2013). Although the brand extension can have new associations, it is important to note that association from the parent brand needs to be transferred to the brand extension, based on how well the extension and the parent brand fit or are compatible with one another (Le Roux and Maree, 2016). Brand extensions have also been identified to have a negative impact on the parent brand, this being established by newly formed associations that are linked from the brand extension to the parent brand (Martinez and Pina, 2003). Once the brand extension forms its own associations, these new links will also impact the parent brand image. Deducing from the aforementioned discussion, it can be proposed that brand extensions, once launched, form new associations for the product and for the parent brand. The brand extension should also possess associations from the parent brand. From a perspective of assuming that the brand extension is successful, a hypothesis has been built positing that brand extensions have a positive impact on brand associations, both for the newly formed product, and for the parent brand image.

H8: Brand extensions have a positive impact on brand associations.

2.13. Brand Attitudes and Positive Brand Extensions Perceptions

Brand attitude can be identified as a contributing factor to the concept of achieving positive brand extension perceptions. It is important to build positive consumer attitudes towards a brand. Attitudes and perceptions are terms that are closely linked concepts. Attitudes describe 43 how consumers feel towards a brand, and perception describes what consumers think of a brand. When developing attitudes, marketers need to understand the concept of value. Wang (2015) states that value is a representative of consumers' purchasing intent (Wang, 2015). Brands are

continuously trying to build a brand image that will influence consumer attitudes in a positive way, once consumers have favorable attitudes, when a brand uses a brand extension strategy, the favourable attitudes aid in encouraging consumers to accept the brand extension and therefore having a positive perception towards the brand extension (Alavinasab et al., 2017). Afzal (2013) states that brand extension failures occur when consumers have a negative attitude towards the parent brand. When it comes to brand extensions and attitudes, research has developed the concept of consumer innovativeness. Consumer innovativeness is the extent and willingness of consumers to try new products (Selvanayagam et al., 2015). In many instances, consumer innovativeness relies on an established brand, the parent brand, this is due to the fact that an established brand reduces the risk associated with purchasing a new product because characteristics are transferred from the existing brand to the brand extension (Le et al., 2012). Concluding from the mentioned information, it is established that attitudes form a base foundation for consumer decisions. Favourable attitudes therefore need to be transferred from the parent brand to the brand extension, these favourable attitudes will aid in shaping consumer perceptions towards the brand. The process thus needs to work vice versa, once the brand extension has been formed, the intention is for the consumer to have favourable attitudes about the new product as well, this thus helps further build the brand equity of the parent brand (Glynn and Brodie, 1998; Martinez and Pina, 2003). It can be hypothesised that brand attitudes have a positive impact on brand extension perception.

H9: Brand attitudes have a positive impact on brand extension perception.

2.14. Brand Associations and Positive Brand Extension Perception

It is imperative to consider the importance between brand association and the success of a brand extension. Brand associations are a contributing factor to building successful brands; this is because strong, favourable and unique brand associations are an essential source to brand equity which drives consumer behaviour (Leone et al., 2011). Lazanova (2016) states that brand association influence the consumer buying process, in effect, they influence the purchase decision which later can be transformed into brand attachment, she goes on to (Lozanova, 2016). Transferability of brand associations depends on product fit, although other research speculates that associations can be transferred not only through product fit but when the parent brand and the brand extension have high similarity-the two might not exist in the same category, but if there is high similarity then the associations can be transferred (Manthiou et al., 2016). Once brand associations are linked to the brand extension, the perceived risk is reduced (Taskin et al., 2016). Although associations can be transferred from the core brand to the brand extension, the brand extension also forms its own associations based on the position and target market for the brand extension (Le Roux and Maree, 2016). Gathering from the assumptions discussed, brand associations and their relevance in the market and to the consumer, aid in establishing positive brand extension perceptions. It is also important to evaluate association fit between the brand extension and the core brand-the more related the category of the extension to the associations of the core brand, the more the likelihood of consumer acceptance and positive perception of the brand due to low perceived risk of trying a new product. It can therefore be hypothesised that brand associations have a positive impact on positive brand extension perceptions.

H10: Brand associations have a positive impact on brand extension perceptions.

3. RESEARCH METHODOLOGY

Our ontological assumption in an objective manner was that brand awareness, parent brand image, brand extensions, brand attitudes and brand associations are all instrumental in determining positive brand extension perceptions. Therefore, from the ontological perspective of objectivism of the research, this investigation adopted a positivist paradigm and deductive reasoning, as it seeks to discover a link between the variables presented for this analysis as well as the use of measurement instruments for gathering data. Hence, a quantitative approach was applied as it improves accuracy of findings by means of statistical analysis. The design was suitable to solicit the required information relating to brand awareness, parent brand image, being quantitative in nature, the measurement instrument was compiled from several existing scales that were adapted to suit the purpose of the study. Once scale reliability and validity were established, structural equation modelling (SEM) was used to test the model fit, followed by the hypotheses testing and path modelling. Structural equation modelling was performed using AMOS 25 software, and the descriptive statistics were obtained through SPSS 25 software.

3.1. Data Analysis

Initially, preliminary analysis of the data was conducted using the statistical software SPSS, version 25.0. Thereafter, an SEM procedure was applied to perform the hypotheses testing using the AMOS (version 25.0) package.

3.2. Measuring Instrument

For the purpose of this study, a self-administered questionnaire was used for collecting the necessary data. A questionnaire refers to a device used for securing answers to questions in a definite order by using a form which the respondent fills in by himself (Chandra et al., 2017). The questionnaire was divided into s sections, namely Section A consisted of the general, profile and demographic information of the participants. Section B to G measured all the variables under investigations. The scales for these variables were adapted from previous studies (Joshi and Yadav, 2017; Pather, 2016; Mashwama, 2015; Lozanova, 2016; Afzal, 2013). Responses for Section B, C, D, E and F were measured by a five-point Likert scale, denoting, 1 = strongly disagree, 2 = disagree, 3 = neither disagree nor agree/neutral, 4 = agree and 5 = strongly agree.

3.3. Biographical Information of the Sample

Demographic information specifies socio-economic descriptors of the partakers involved in the survey, which is mentioned as the cataloguing of data (Malhotra, 2010). Section A of the feedback form provides a view of the demographic information of the total sample, which is gender, age, education level, household members, gross income and frequency of purchase, Table 1 represents the profile of the research participants. The province of Gauteng which has a total population of approximately 15 million people was used as a sample

Table 1: Demographic profile of the respondents

Research construct	Category	Frequency	Percent	Valid percent	Cumulative percent
Gender	Male	120	50.4	50.4	50.4
	Female	118	49.6	49.6	100.0
	Total	238	100.0	100.0	
Age category	18-30 years	103	43.3	43.3	43.3
	30-39 years	92	38.7	38.7	81.9
	40-49 years	42	17.6	17.6	99.6
	50-59 years	1	0.4	0.4	100.0
	Total	238	100.0	100.0	
Highest level of education	No formal education	12	5.0	5.0	5.0
	Basic education	50	21.0	21.0	26.1
	Diploma	97	40.8	40.8	66.8
	Degree	64	26.9	26.9	93.7
	Postgraduate or equivalent degree	15	6.3	6.3	100.0
	Total	238	100.0	100.0	
Household members	1-2	26	10.9	10.9	10.9
	4	45	18.9	18.9	29.8
	5	81	34.0	34.0	63.9
	6-7	68	28.6	28.6	92.4
	8 or more	18	7.6	7.6	100.0
	Total	238	100.0	100.0	
Gross income	No answer	17	7.1	7.1	7.1
	Under R5000	16	6.7	6.7	13.9
	Under R5001-R10000	61	25.6	25.6	39.5
	Under R10001-R20000	79	33.2	33.2	72.7
	Above R20000	65	27.3	27.3	100.0
	Total	238	100.0	100.0	
Frequency of purchase	More than once a week	8	3.4	3.4	3.4
	Every 2 weeks	31	13.0	13.0	16.4
	Once a month	86	36.1	36.1	52.5
	Once every 2 months	87	36.6	36.6	89.1
	Never	26	10.9	10.9	100.0
	Total	238	100.0	100.0	

frame. Only consumers who shop at Southgate and Maponya Mall were surveyed using a convenient random sampling technique. The data indicates that there was a fairly evenly split result with regards to the gender profile. Males were slightly more represented with an outcome of 50.4%, and females resulting as 49.6%. The age group profile was divided into four categories and participants between the ages of 18-30 years represented 43% of the sample. Individuals between the ages of 30-39 years followed with 38, 7% representation. From an education stand point, the data illustrates that the majority of the participants have partaken in further education and training, with "no formal education" being the least represented in this area. 34% of participants have household members and 28, 6% of the participants have 6-7 household members. The indication on gross income was fairly widespread - R5000 - +R20 000. The majority of the respondents have indicated that they purchase Clover Tropika once every 2 months or either once a month.

4. RESEARCH RESULTS

The results section focuses on the results of Confirmatory Factor Analysis (CFA), hypothesis tests performed through Structural Equation Modeling (SEM) and discussions. A CFA is a unique type of factor analysis used to assess whether a construct's measurements are compatible with that construct's nature (Kline, 2011). The SEM method is used to evaluate interactions between variables that are latent (unobservable) such as dependent and independent constructs (Mafini and Loury-Okoumba, 2018; Bagozzi and Yi, 2012).

4.1. Psychometric Properties of Measurement Scales

The assessment of the measurement scales' psychometric properties was performed through a CFA to determine the constructs' reliability, validity, and model fit. Table 2 presents the outcomes of the CFA assessment.

4.2. Reliability

In terms of reliability, the results provided in Table 2 indicate that ranges the Cronbach alphas obtained (0.71-0.82). These results exceeded the suggested reliability cut-off threshold of 0.70 suggested by Nunnally (1978) and in all cases, the results exceeded 0.80 across all the reported values on Cronbach's alpha coefficient, which Bryman et al. (2017) posits as being a signal of acceptable internal consistency reliability.

Table 2 above shows the loading of each item on their particular construct. The lowest value for each respective item loading for the research constructs is 0.55. Therefore, all the individual item loadings exceeded the recommended value of 0.5 (Anderson and Gerbing, 1988). This indicates that all the measurement instruments are acceptable and reliable since all the individual items converged well and with more than 50% of each item's variance shared with its respective construct (Fraering and Minor, 2006).

Composite reliabilities (CR) and average variance extracted (AVE) for each construct were also computed using the formulae proposed by Fornell and Larcker (1981. p. 22), i.e.

Table 2: Psychometric properties of measurement scales

Research constructs	Items	Descriptive statistics				Cronbach's test		CR value	AVE value	Factor loadings
		Mean		SD		Item total	α value			
BAW	BAW1	3.600	3.640	1.210	1.190	0.530	0.820	0.920	0.670	0.770
	BAW2	3.500		1.290		0.620				0.860
	BAW4	3.660		1.140		0.540				0.900
	BAW5	3.880		1.130		0.550				0.900
	BAW7	3.580		1.230		0.670				0.870
	BAW8	3.610		1.160		0.650				0.550
PBI	PBI1	3.730	3.730	1.180	1.150	0.651	0.710	0.700	0.540	0.550
	PBI4	3.730		1.130		0.530				0.880
						00.672				
BE	BE1	3.820	3.900	1.040	1.030	0.500	0.730	0.920	0.740	0.870
	BE2	3.990		0.980		0.550				0.910
	BE3	4.020		0.970		0.550				0.850
	BE4	3.760		1.120		0.520				0.800
BAT	BAT1	3.790	3.750	1.190	1.610	0.640	0.750	0.800	0.660	0.800
	BAT2	3.700		1.220		0.690				0.830
BAS	BAS1	3.650	3.690	1.180	1.220	0.610	0.730	0.740	0.590	0.750
	BAS2	3.730		1.250		0.660				0.780
PBE	PBE1	3.960	3.940	1.060	1.030	0.520	0.760	0.890	0.670	0.810
	PBE2	3.800		1.060		0.540				0.930
	PBE3	4.050		0.970		0.580				0.820

BAW: Brand awareness, PBI: Parent brand image, BE: Brand extension, BAT: Brand attitude, BAS: Brand association, PBE: Positive brand extension perceptions

$$CR\eta = (\Sigma\lambda yi)2/[(\Sigma\lambda yi)2+(\Sigma\varepsilon i)] \quad (1)$$

Where
CRη = Composite reliability, (Σλyi) 2= Square of the summation of the factor loadings; (Σεi) = Summation of error variances.

$$V\eta = \Sigma\lambda yi2/(\Sigma\lambda yi2+\Sigma\varepsilon i) \quad (2)$$

Where
Vη= Average Variance Extracted (AVE); Σλyi2= Summation of the squared of factor loadings; Σεi= Summation of error variances."

As shown from the results shown in Table 2, the lowest composite reliability (CR) value of 0.70 (for the Parent Brand Image scale) is well above the recommended threshold of 0.6 (Hair et al., 2018). Furthermore, Hair et al., (2014. p. 106) concur with Fornell and Larcker (1981. p. 46) in stating "an AVE of 0.5 or higher is a good rule of thumb suggesting adequate convergence. As depicted from Table 2, the lowest AVE value was 0.54. This reflected the presence of convergent validity. An AVE of <0.5 indicated that, on average, more error remains in the items than variance explained by the latent factor structure imposed on the measure (Fornell and Larcker, 1981). By and large, these results provided evidence for acceptable levels of research scale reliability (Chinomona and Chinomona, 2013; Chinomona and Mofokeng, 2016).

4.3. Discriminant Validity

The inter-construct correlation matrix is used to assess the validity of measurement instruments, specifically discriminant validity (Ab Hamid et al., 2017). Correlations among constructs were evaluated to see if they were lower than 1. The higher the correlation between variables, the lower the validity of those variables (Kafetzopoulos et al., 2015; Kim et al., 2011). The inter-construct correlation values must be below 0.6, and in some cases below 0.85, to indicate discriminant validity. According to Table 3, the highest correlation value was 0.812 and the lowest correlation value was 0.153. These correlation values are below 0.85 and, therefore, it can be concluded that there is discriminant validity between all the constructs (Morar et al., 2015).

Table 3: Correlation matrix

Research variables	BAW	PBI	BE	BAT	BAS	PBE
BAW	1.000					
PBI	0.685**	1.000				
BE	0.530**	0.564**	1.000			
BAT	0.812**	0.658**	0.470**	1.000		
BAS	0.358**	0.343**	0.226**	0.467**	1.000	
PBE	0.321**	0.153*	0.271*	0.240**	0.231	1.000

BAW: Brand awareness, PBI: Parent brand image, BE: Brand extension, BAT: Brand attitude, BAS: Brand association, PBE: Positive brand extension perceptions

4.4. Model fit Analysis

According to Anderson and Gerbing (1988), model fit analysis is a process that assesses how well the data represents the model. In this study, model fit was tested by using the following indices: Chi-square/degrees of freedom, comparative fit index (CFI), incremental fit index (IFI), Tucker-Lewis index (TLI), normative fit index (NFI), goodness of fit (GFI) and random measure of standard error approximation (RMSEA). The acceptable thresholds should be equal to or higher than 0.90 for CFI, IFI, RFI, NFI, GFI and AGFI (Lysons and Farrington, 2012). For Chi-square/degrees of freedom a ratio of 3:1 or less is recommended and RMSEA value should be equal to or <0.08 (Lysons and Farrington, 2012). The general model fit indices for both the CFA and SEM models are presented in Table 4.

5. DISCUSSION OF RESULTS

It can be observed that H1 (Brand awareness and parent brand image) has a path coefficient of 0.479. There is a positive relationship between brand awareness and parent brand image. This

Table 4: Model fit statistics

Fit indices	Acceptable fit indices	CFA (measurement model)	SEM (structural model)
Chi-square/degree of freedom (df)	<3.0	1.360	1.391
Incremental fit index (IFI	>0.90	0.990	0.930
Tucker-Lewis index (TLI)	>0.90	0.980	0.941
Comparative fit index (CFI)	>0.90	0.990	0.967
Normative fit index (NFI)	>0.90	0.950	0.941
Goodness of fit (GFI)	>0.90	0.900	0.954
Root mean square error of approximation (RMSEA)	<0.08	0.031	0.039

CFA: Confirmatory factor analysis, SEM: Structural equation modelling

relationship is both supported and significant at the P = 0.001 level of significance. These results are in line with the works of Martinez who suggests that brands need to strive for a favourable brand image and brand attitude towards their brand (Martinez, 2012). Ghobarni and Madani further reiterate this by stating that brand image and brand attitudes are interlinked in such a way that however the consumer feels about the parent brand will most likely impact the perceptions of the brand extension (Ghobarni and Madani, 2012).

On Table 5, the results observation presents H6 (Parent brand image and brand association) with a path coefficient of 0.164. This result portrays that there is not a significant relationship between the parent brand image and brand association. The P = 0.067, 5.10.7 Hypothesis Discussion 7 with a path coefficient of 0.341 it can be proved that H7 can be validated. H7 therefore confirm that there is a significant relationship between brand extensions and brand attitudes. The relationship between the two variables is supported by a significant level of P > 0.001. These results are in line with the works of Chung and Kim (2014). The authors emphasised the relationship between brand attitude and brand extensions, they further reiterated the importance of perceived fit between the brand and the brand extension, which therefore influences the relationship of the brand extension and the consumers' perception (in this case brand attitude) towards the brand.

It can be observed that H8 (Brand Extension and Brand Associations) have a path coefficient of 0.234; this therefore denotes that there is a positive relationship between brand extension and brand associations. The relationship between the two variables is further supported by a level of significant P > 0.001. Academic research which complements the hypothesis includes the works of Moon and De Pelsmacker (2012). The authors state that brand extensions are predictors of brand associations. Roux and Maree further complement the hypothesis in their work where they note that brand extensions form their own brand associations separate from the parent brand (Figure 1).

Earlier in the paper, it was hypothesised that brand attitudes have a positive impact on brand extension perception. The hypothesis table supports this statement by reflecting results of a path coefficient of 0.311. It can therefore be concluded that H9 (Brand Attitudes and Brand Extension Perception) have a positive and significant relationship, this is further supported by a level of significant P > 0.001. Academic work which complements this hypothesis includes the works of Alavinasab et al. who state that brand attitudes stem from the parent brand and are transferred to the brand extension through perceived fit; he continues to say that favourable attitudes aid in the acceptability of the brand extension in the market (Alavinasab et al., 2017).

Table 5: Summary of the hypotheses testing

Hypothesised Relationship	Hypothesis	Path coefficient β	P-value	Outcome
BAW → PBI	H1	0.480	***	Positive and significant
PBI → BE	H2	0.680	***	Positive and significant
BAW → BAT	H3	0.460	***	Positive and significant
BAW → BAS	H4	0.970	***	Positive and significant
PBI → BAT	H5	0.920	***	Positive and significant
PBI → BAS	H6	−0.160	0.070	Negative and insignificant
BE → BAT	H7	0.340	***	Positive and significant
BE → BAS	H8	0.230	***	Positive and significant
BAT → PBE	H9	0.310	***	Positive and significant
BAS → PBE	H10	0.490	***	Positive and significant

BAW: Brand awareness, PBI: Parent brand image, BE: Brand extension, BAT: Brand attitude, BAS: Brand association, PBE: Positive brand extension perceptions

The last hypothesis statement was that brand associations have a positive impact on brand extension perceptions. The hypothesis test result outcome was a path coefficient of 0.486 which has met the minimum requirement and therefore suggests that there is in fact, a significant relationship between brand associations and positive brand extension perception. This relationship is supported by a significant level of P > 0.001. The results are complemented by the works of Taskin, Emel, Ozturk and Petricli, who mention the importance of association transferability from parent brand to the brand extension in order to achieve brand extension acceptability and favourable perceptions (Taskin et al., 2016). Leone et al. further support this hypothesis by linking favourable associations to brand equity which results in positive brand extension perception (Leone et al., 2011).

5.1. Implications

The research conducted has both academic and practical implications. The first section of the implications looks at the academic implications and the second section the practical implications. Academically, the current research study contributes to the existing literature on leveraging on the parent brand image to build brand extensions. The study evaluated key construct of leveraging on the parent brand image, these constructs included brand attitudes and brand associations which aid in building

Figure 1: Structural model

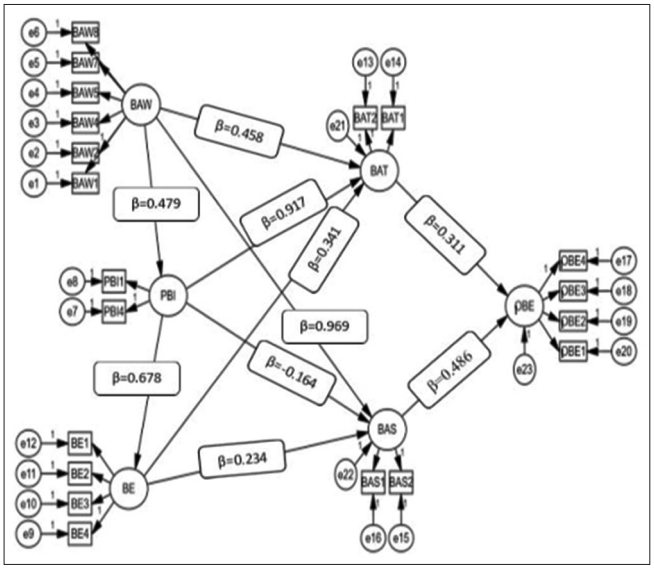

successful brands, in particular brand equity. Brand managers need to evaluate key brand equity constructs which include brand awareness, brand attitudes and brand associations. These concepts are built through the parent brand image and through a congruent self-image and attachment between the consumer and the brand. It is also important for brand managers to ensure that there is product/category fit between the parent brand and the brand extension. The parent brand image firstly needs to be thoroughly built before a brand extension can leverage off it, an indication of this is high consumer based brand equity. Considering high parent brand equity, brand extensions can leverage on the parent brands image, awareness, attitudes and associations while constructing and developing its own identity. Further, academically, the relationship between brand awareness and brand 94 association was noted as significant; this implies that without achieving brand awareness and distinctive, strong brand associations from both the parent brand and the brand extension, it would be difficult to achieve a positive brand extension perception. Dissecting the mentioned statement for this study, it can be noted that, should Clover have been in a situation where consumers did not recall and recognise the brand, consumers were unlikely to have favourable perceptions about Tropika. Further to this, should consumers have felt that Clover was not capable of making a dairy fruit drink, key associations would not have been able to be transferred. The relationship between the parent brand image and brand attitudes also proved to be key in the study, achieving the second highest factor loading. This implies that the attitudes of the parent brand need to be favourable for a positive brand extension perception to exist. Furthermore, the brand extension itself, needs to have favourable attitudes and this is highly determined by perceived fit. The relationship between the parent brand image and the brand extension was also positive, this implies that extending a brand using an existing brand is a strategy of note. It is therefore recommended that Brand Managers use a brand extension strategy versus creating a new brand from scratch; by using a brand extension strategy, they should also make sure that the brand extension contributes positively to the equity of the parent brand and vice versa.

5.2. Future Research and Limitations

The current research study leaves room for researchers to explore related variables. When reviewing literature there was a continuous mention of consumer purchase intent as well as overall brand equity which could be explored as a possible outcome of the research. The research was only done at Southgate and Maponya Mall, there is an opportunity to explore other emerging markets within South Africa, such as KwaZulu-Natal and Limpopo. The researcher therefore recommends that similar studies be conducted with a larger sample size and in different regions. The study was limited in terms of funding, this means that more data could have been collected should there had been funds to reward field workers. Time was also a big constraint because the data was collected at mall intercepts i.e. the data could have been collected in December, but because December is peak selling time for the mall, the research had to be collected in January 2019, therefore delaying data analysis as well as limiting the number of consumers for potential reach.

5.3. Overall Research Contribution

The current study makes a contribution to literature on leveraging on the parent brand image to build brand extensions. Based on the findings of the study, brand extensions can leverage on the parent brand image on the basis that the perceived fit between the two is strong. Leverage can be achieved through the transfer of brand awareness and brand attitudes. Based on the findings of the study, brand awareness and brand attitudes had a relationship of high significance. In Le, Cheng, Lee and Jains' work, it is noted that an establish brand reduces the risk associated with purchasing a new product, as a result of transferability from perceptions that exist from the parent brand (Le et al., 2012). The study therefore confirms key constructs which are essential to achieve a positive brand extension perception. Another contribution made to the literature was the relevance of self-congruency where the initial relation to a brand occurs, should the relationship be satisfactory, and then brand attachment occurs. This is an important element that usually exists for the parent brand-which can result in positive brand extension perceptions. The study also makes a contribution to brand extension studies in the context of emerging economic areas.

6. CONCLUSION

The investigation of the relationships between brand awareness, parent brand image, and brand extensions was the aim of the study. These were to be looked into in relation to brand attitudes and associations, with the goal that the results would produce a favorable perception of brand extension. The purpose of the inquiry was to determine whether the relationship between the previously indicated variables was significant in achieving the outcome. After developing and testing a conceptual model, the subsequent parts discussed the implications of the research study, potential areas for future research, and study limitations. Lastly, the overall contribution of the research was then described.

REFERENCES

Aaker, D.A. (1991), Managing Brand Equity: Capitalizing on the Value of a Brand Name. New York: Free Press.

Aaker, D.A., Keller, K.L. (1990), Consumer evaluations of brand

extensions. Journal of Marketing, 54(1), 27-41.

Ab Hamid, M.R., Sami, W., Sidek, M.H.M. (2017), Discriminant validity assessment: Use of Fornell and Larcker criterion versus HTMT criterion. Journal of Physics Conference Series, 890, 1-5.

Afzal, S. (2013), Factors influencing successful brand extension into related and unrelated product categories. Asian Economic and Financial Review, 3(2), 216-226.

Alavinasab, S.M., Soltani, M., Alimohammadi, J. (2017), The effect of brand extension strategy on brand image to customers. Journal of Economics Management and Trade, 17(4), 1-9.

Anderson, J.C., Gerbing, D.W. (1988), Structural equation modeling in practice: A review and recommended two-step approach. Psychological Bulletin, 103(3), 411-423.

Anwar, A., Gulzar, A., Sohail, B. F., Akram N.S. (2011), Impact of brand image, trust and effect on consumer brand extension attitude: The mediating role of brand loyalty. International Journal of Economics and Management Sciences, 1(5), 3-79.

Arslan, F.M., Altuna, O.K. (2010), The effect of brand extensions on product brand image. Journal of Product and Brand Management, 19(3), 170-180.

Bagozzi, R., Yi, Y., (2012), Specification, evaluation, and interpretation of structural equation models. Journal of the Academy of Marketing Sciencek, 40(1), 8-34.

Bivainienė, L., Šliburytė, L. (2008), The brand image as an element of brand equity. Socialiniai tyrimai, 12(2), 22-31.

Boisvert, J. (2011), Conceptualization and modeling of the process behind brand association transfer. International Journal of Market Research, 53(4):541-556.

Bryman, A., Bell, E., Hirschsohn, P., Dos Santos, A., Du Toit, J., Masenge, A., Van Aardt, I., Wagner, C. (2017), Research methodology: Business and management contexts. Cape Town, South Africa: Oxford University Press.

Chandra, A., Gayatri, A., Devi, D. (2017), Assessment of emotional intelligence in first year medical graduates-A Questionnaire based study. International Journal of Physiology, 5(1), 124-126.

Chien-Hsuing, L. (2011), A study on the relationship between the brand image and customer satisfaction in the catering businesses. African Journal of Business Management, 5(18), 7732-7739.

Chinomona, E., Mofokeng, T.M. (2016), Impact of Organisational politics on job dissatisfaction and turnover intention: An application of social exchange theory on employees working in Zimbabwean small and medium enterprises (SMEs). Journal of Applied Business Research, 32(3), 857-871.

Chinomona, R., Chinomona, E. (2013), The influence of employees' perceptions of organizational politics on turnover intentions in Zimbabwe's SME sector. South African Journal of Business Management, 44(2), 15-24.

Chung, H., Kim, S. (2014), Effects of brand trust, perceived fit and consumer innovativeness on fashion brand extension evaluation. Atlantic Marketing Journal, 3(1), 8.

Clover. (2016), Clover Annual Report. Available from: https://www.clover.co.za/investors/reports-by-year/?report_year=all&report_type=annual [Last accessed on 2018 Feb 17].

Clover. (2018), Available from: https://www.qwertydigital.co.za/wpcontent/uploads/2017/08/digital-statistics-in-south-africa-2017-report.pdf [Last accessed on 2017 Feb 17].

Cutrona, G., Margini, A., Fantuzzi, C. (2016), Value chain vs life cycle approach for product extensions. In: Concordia Institute for Information Systems Engineering. Speech presented at the 2nd INCOSE Italia Conference on Systems Engineering, CIISE 2016 held at Politecnico di Torino, Italy in 2016.p.26-30. Available from: https://www.iris.unimore.it/handle/11380/1221450 [Last accessed on 2022 Jul 23].

Faganel, A., Janeš, A. (2015), Branding Trends 2020. Doctoral Dissertation. Slovenia: Univerza na Primorskem, Fakulteta za Management.

Fornell, C., Larcker, D.F. (1981), Evaluating structural equation models with unobservable variables and measurement error. Journal of Marketing Research, 18(1), 39-50.

Fraering, M., Minor, M.S. (2006), Sense of community: An exploratory study of US consumers of financial services. International Journal of Bank Marketing, 24(5), 284-306.

French, A., Smith, G. (2013), Measuring brand association strength: A consumer based brand equity approach. European Journal of Marketing, 47(8), 1356-1367.

Ghobarni, H., Madani, F. (2012), The analysis of effective factors on product brand image after extension (PBI) in home appliances industry in Iran. African Journal of Business Management, 6(27), 8220-8226.

Ghorban, Z.S. (2012), Brand attitude, its antecedents and consequences. Investigation into smartphone brands in Malaysia. Journal of Business and Management, 2(3), 31-35.

Ghorbani, H., Madani, F. (2012), The analysis of effective factors on product brand image after extension (PBI) in home appliance industry in Iran. African Journal of Business Management, 6(27), 8220-8226.

Glynn, M.S., Brodie, R.J. (1998), The importance of brand-specific associations in brand extension: Further empirical results. Journal of Product and Brand Management, 7(6), 509-518.

Grassie, I. (2009), Facility Planning: An Approach to Optimise a Distribution Network at Clover SA. Bachelors of Industrial Engineering Research Report. Pretoria: University of Pretoria.

Hair, J.F. Jr., Black, W.C., Babin, B.J., Anderson, R.E. (2018), Multivariate Data Analysis. 8th ed. Hampshire, United Kingdom: Cengage Learning.

Hair, J.F., Sarstedt, M., Hopkins, L., Kuppelwieser, V.G. (2014), Partial least squares structural equation modelling (PLS-SEM). European Business Review, 26(2), 106-121.

Hameed, A. Saleem, M. S., Rashid, M., Aslam, R. (2014), The impact of brand extension on parent brand image, International Journal of Humanities and Social Science, 4(2), 236-245.

Hameed, A. Saleem, M. S., Rashid, M., Aslam, R. (2014), The impact of brand extension on parent brand image, International Journal of Humanities and Social Science, 4(2), 10-23.

Hariri, M., Vazifehdust, H. (2011), How does Brand Extension Affect Brand Image. Vol. 1. In: International Conference on Business and Economics Research. p.104-109.

Hsieh, M.H., Pan, S.L., Setiono, R. (2004), Product-,corporate-,and country-image dimensions and purchase behavior: A multicountry analysis. Journal of the Academy of Marketing Science, 32(3), 251-270.

Hsieh, M. H., Pan, S. L., Setiono, R. (2004), Product-, corporate-, and country-image dimensions and purchase behavior: A multicountry analysis. Journal of the Academy of marketing Science, 32(3), 251-270.

Joshi, R., Yadav, R. (2017), Evaluating the feedback effects of brand extension on parent brand equity: A study on Indian FMCG industry. Vision, 21(3), 305-313.

Kafetzopoulos, D., Gotzamani, K., Gkana, V. (2015), Relationship between quality management, innovation and competitiveness. Evidence from Greek companies. Journal of Manufacturing Technology Management, 26(8), 1177-1200.

Kang, M. (2015), The effect of the parent brand's concept, the extensions' product concept and congruity between parent brand's image and consumers' self-image on attitude towards the extension brand. Advanced Science and Technologies Letters, 84, 122-124.

Keller, K.L. (2013), Strategic Brand Management. 4th ed. United Kingdom:

Pearson Education.

Kim, Y.K., Trail, G.T., Woo, B., Zhang, J. (2011), Sports consumer-team relationship quality: Development and psychometric evaluation of a scale. International Journal of Sports Marketing and Sponsorship, 12(3), 57-74.

Kline, R. (2011), Principles and Practice of Structural Equation Modeling. 3rd ed. New York: Guilford Press.

Kotler, N. (2001), New ways of experiencing culture: The role of museums and marketing implications. Museum Management and Curatorship, 19(4), 417-425.

Kreuzer, M., von Wallpach, S. (2012), Comparing Uni-Sensory Versus Multi-Sensory Methods for Embodied Brand Knowledge Retrieval. In: Proceedings of the 41st EMAC Annual Conference. European Marketing Academy.

Le Roux, I., Maree, T. (2016), Motivation, engagement, attitudes and buying intent of female Facebook users. Acta Commercii, 16(1), 1-11.

Le, A.N.H., Cheng, J.M.S., Lee, Y.H., Jain, M. (2012), Brand extension: Using parent brand personality as leverage. Asia Pacific Journal of Marketing and Logistics, 24(4), 599-618.

Leone, R. P., Rao, V. R., Keller, K. L., Luo, A. M., McAlister, L., Srivastava, R. (2011), The Theroretical Separation of Brand Equity and Brand Value: Managerial Implications for Strategic Planning. Journal of Brand Management, 14 (5), 380-395.

Lozanova, L. (2016), To extend or not to extend: Advantages and disadvantages of brand extension strategy. Economic Alternatives, 4, 500-514.

Lozanova, L. (2016), To Extend or Not to Extend: Advantages and Disadvantages of Brand Extension Strategy. Economic Alternatives, 4(1), 500-514.

Lysons, K., Farrington, B. (2012), Purchasing and Supply Chain Management. Essex: Pearson Education Limited.

Madlala, P. (2019), Leveraging on the Parent Brand Image to Build Brand Extensions: A Consumer's Perspective on the Clover Tropika Brand in Emerging Economic Areas. Masters Dissertation, University of the Witwatersrand, Faculty of Commerce, Law and Management, School of Economic and Business Sciences.

Mafini, C., Loury-Okoumba, W.V. (2018), Extending green supply chain management activities to manufacturing small and medium enterprises in a developing economy. South African Journal of Economic and Management Sciences, 21(1), 1-12.

Malhotra, N.K. (2010), Marketing Research: An Applied Orientation. Upper Saddle River, NJ: Prentice Hall.

Manthiou, A., Kang, J., Sumarjan, N., Tang, L. (2016), The incorporation of consumer experience into the branding process: An investigation of name-brand hotels. International Journal of Tourism Research, 18(2), 105-115.

Martınez, E., Pina, J.M. (2003), The negative impact of brand extension on parent brand image. Journal of Product and Brand Management, 12(7), 432-448.

Martinez, E., Polo, Y., De Chernatony, L. (2008), Effect of brand extension strategies on brand image: A comparative study of the UK and Spanish markets. International Marketing Review, 25(1), 107-137.

Mirzai, A., Fard, Y. S., Slambolchi, A. (2016), The branding: a study of brand image, brand associations and reputation. Advanced Social Humanities and Management, 3(1), 52-64.

Moons, I., De Pelsmacker, P. (2012), Emotions as determinants of electric car usage intention. Journal of Marketing Management, 28(3-4), 195-237.

Moons, I., De Pelsmacker, P. (2012), Emotions as determinants of electric car usage intention. Journal of marketing management, 28(3-4), 195-237.

Morar, A., Venter, M., Chuchu, T. (2015), To vote or not to vote: Marketing factors influencing the voting intention of university students in Johannesburg. Journal of Economics and Behavioral Studies, 7(6), 81-93.

Nielsen Data. (2016), Clover Industries Limited. Integrated Annual Report for the year Ended 30 June 2016. Available from: https://www.sharedata.co.za/data/013310/pdfs/clover_ar_jun16.pdf [Last accessed on 2022 Aug 03].

Nunnally, J.C. (1978), Psychometric Theory. 2nd ed. New York: McGraw-Hill.

Pather, P. (2016), Brand equity as a predictor of repurchase intention of male branded cosmetic products in South Africa, Business & Social Science Journal (BSSJ), 2,(1), 1-23.

Perera, W.L.M.V., Dissanayake, D.M.R. (2013), The Impact of Brand Awareness, Brand Association and Brand Perceived Quality on Female Consumers' Purchase Decisions of Foreign Makeup Products (a study of youth segment). In: Conference Proceedings of 4th International Conference on Business and Information (ICBI). Sri Lanka: University of Kelaniya.

Rizwan, M., Xian, Q. (2008), Study of brand Awareness and Brand Image of Starbucks. Rizwan, M., Xian, Q. (2008), Study of brand awareness and brand image of Starbucks.Västerås: Mälardalen University. (Thesis – MIM).

Romanuik, J., Sharp, B., Paech, S., Driesener, C. (2004), Brand and advertising awareness: A replication and extension of a known empirical generalisation. Australasian Marketing Journal (AMJ), 12(3), 70-80.

Schmitt, B. (2012), The consumer psychology of brands. Journal of Consumer Psychology, 22(1), 7-17.

Selvanayagam, J.E., Ragel, V.R. (2015), Consumer acceptability of brand extensions: The role of brand reputation and perceived similarity. IUP Journal of Brand Management, 12(3), 18-29. Bivainienė, L., Šliburytė, L. (2008), The brand image as an element of brand equity. Socialiniai Tyrimai, 2008(2), 22-31.

Severi, E., Ling, K. C. (2013), The mediating effects of brand association, brand loyalty, brand image and perceived quality on brand equity. Asian Social Science, 9(3), 125-137.

Sharma, R. (2017), Building Customer Based-Brand Equity of Domestic Brands: Role of Brand Equity Dimensions. California: Sage Publications.

Taşkın, Ç., Emel, G.G., Öztürk, O., Petriçli, G. (2016), Exploring the antecedents of brand extension success: A research on an athletic footwear brand. International E Journal of Advances in Social Sciences, 2(5), 339-347.

Vukasovič, T. (2012), Searching for competitive advantage with the brand extension process. Journal of Product & Brand Management. 27(1), 492-498.

Vyas, Y., Brahmbhatt, A.C. (2016), Content analysis of brand elements selected by the brands marketed in India. IES management college and research centre. Anvesha The Journal of Management, 9(2), 1-9.

Wang. (2015), Effect of food service-brand equity on consumer-perceived food value, physical risk, and brand preference. British Food Journal, 117(2), 553-564.

Weinswig, D. (2015), European Grocery Discounters Report. November. Available from: https://www.fbicgroup.com/sites/default/files/european%20grocery%20discounters%20report%20by%20fbic%20global%20retail%20tech.pdf [Last accessed on 2022 Jul 23].

Wu, S.I., Lo, C.L. (2009), The influence of core-brand attitude and consumer perception on purchase intention towards extended product. Asia Pacific Journal of Marketing and Logistics. 21(1), 174-194.

Zhang, Y. (2015), The impact of brand image on consumer behavior: A literature review. Open journal of business and management, 3(01), 58-61.