International Review of Management and Marketing

ISSN: 2146-4405

available at http: www.econjournals.com

International Review of Management and Marketing, 2021, 11(3), 85-95.

The Factors That Influence Organizational Citizenship Behaviour For The Environment

M. Nur Huda*, Lenny C. Nawangsari, Ahmad H. Sutawijaya

Universitas Mercu Buana, Jakarta, Indonesia. *Email: a.h.sutawijaya@mercubuana.ac.id

Received: 18 November 2020 **Accepted:** 18 January 2021 **DOI:** https://doi.org/10.32479/irmm.10779

ABSTRACT

Employee voluntary behavior related to environmental awareness in the workplace is very important to support the sustainability of the organization. The purpose of this study was to determine the influence of leadership, organizational culture and job satisfaction on Organizational Citizenship Behavior for the Environment (OCBE) in 3 groups of employees in financial institutions (Banking, Pension Fund and Insurance). This type of research is a quantitative survey method. The study population was employees of financial institutions in Jakarta with a sample size of 126 people. In the 3 financial institutions studied, it can be proven that: 1. Leadership has no effect on OCBE and Work Satisfaction, 2. Organizational Culture affects OCBE and Work Satisfaction, 3. Work Satisfaction has an effect on OCBE, 4. Leadership has no effect on OCBE through Work Satisfaction and 5. Organizational Culture influences OCBE through Work Satisfaction. For further research, it is expected to further analyze other variables that affect OCBE for financial sustainability.

Keywords: OCBE, Work Satisfaction, Leadership, Organizational Culture
JEL Classifications: L2, J2

1. INTRODUCTION

In facing challenges for organizational sustainability, various companies have begun to integrate the concept of the Triple Bottom line (profit, people and planet) with their business strategies. Financial organizations have also begun to complete several regulations on sustainable finance. To achieve organizational goals in implementing green management, companies need human resources who are aware of environmental conservation in their organization. Employee voluntary behavior related to environmental awareness at work (OCBE) has begun to be developed to support sustainable finance.

Based on the results of the pre-survey it was found that, OCBE has not been optimal in terms of efforts to save energy in the workplace, employees who throw garbage in its place, and employees who use paper as needed. There are 3 variables that are thought to influence OCBE, namely leadership, organizational culture and job satisfaction based on the results of the pre-survey. survey.

Increasing employee voluntary behavior in an organization cannot be separated from leadership in managing the organization it runs.

The leader determines the goals and direction of the organization, plans, organizes, moves and controls all human resources owned by a particular organization. This leadership is the main key in carrying out management which plays an important and strategic role in the sustainability of an organization. Leadership is a person's ability that can influence others for the achievement of organizational goals with enthusiasm, so a manager who wants to be successful is required to have effective abilities. The results of the pre-survey state that leadership in financial institutions is still not optimal in terms of communication between leaders and subordinates, leaders who can provide input to their

This Journal is licensed under a Creative Commons Attribution 4.0 International License

subordinates and leaders who are willing to receive input from their subordinates.

Organizational culture is often portrayed in a sense that must be shared. Patterns of beliefs, symbols, rituals and myths that develop over time and serve as the glue that holds an organization together.

Different forms of organization certainly have different cultures, this is natural because the organizational environment is different, for example companies engaged in the service sector such as the financial industry.

Based on the results of the pre- survey it was found that the organizational culture was not optimal in terms of employees expressing their ideas, the relationship between employees in the work unit, and the stability of employees to remain in the organization.

Job satisfaction is important in organizational management. Job satisfaction will affect employee engagement. The results of the pre-survey stated that job satisfaction was not optimal related to the relationship between employees, employee work challenges, and employee job protection.

Several studies related to OCBE stated the importance of company environmental policies to support employee environmental initiatives (Chithra and Yothi, 2017; Hari Patworo and Bernadeta, 2017; Nawangsari and Sutawijaya; 2019). In other studies it has also been proven that leadership is important to increase employee job satisfaction (Belias and Koustelios, 2014; Atmojo, 2015). Research by Belias and Koustelios (2014) and Arifin (2015) states that organizational culture is an important element that greatly affects employee job satisfaction.

Job satisfaction will increase employee OCBE behavior (Paiile and Raineri, 2015; Ju et al., 2015; Han et al., 2019). Good leadership will affect employee OCBE (Boiral et al., 2015). Research conducted by Pham et al. (2018) proves that organizational culture has an effect on OCBE.

Based on the above phenomena, research was carried out on 3 groups of employees at financial institutions (Banking, Pension Fund and Insurance) related to the influence of leadership and organizational culture on OCBE-mediated job satisfaction.

2. LITERATURE REVIEW

2.1. Organizational Citizenship Behavior for the Environment (OCBE)

Boiral and Paille (2012) argue that OCBE is an individual, voluntary social behavior that is not explicitly recognized by formal management systems and which contributes to effective environmental management by organizations. There are three dimensions to measure OCBE, namely, Eco Initiatives, Eco Civic Engagement and Eco Helping.

2.2. Leadership

Leadership is an activity to influence others and change behavior to achieve common goals. Leadership is something that is inherent in a person who has certain characteristics such as personality, ability, and capacity. (Maxwel in Busro; 2018). The dimensions of leadership according to Fiedler in Sutrisno (2017), namely: The relationship between the leader and subordinates, the degree of task arrangement and the power position of a leader.

2.3. Organizational Culture

Robbins et al. (2018) states that organizational culture is a set of values and norms adhered to by organizational members and is considered a norm of behavior in solving company problems. A strong and positive culture is very influential on the behavior and effectiveness of company performance.

The dimensions of organizational culture are:
Trust, Aggressiveness, Personality and Performance.

2.4. Work Satisfaction

Job satisfaction is a general attitude towards one's job as the difference between the amount of reward received by workers and the amount of reward that is believed to be received. Job satisfaction is an important thing that individuals have at work (Robbins, 2015).

The dimensions of job satisfaction are work relations, work challenges and job protection

The research hypothesis in 3 research groups (banking, pension fund institutions and insurance) is as follows:
H1: Leadership has an effect on Work Satisfaction
H2: Organizational Culture affects Work Satisfaction
H3: Leadership has an effect on OCBE
H4: Organizational Culture affects OCBE
H5: Work Satisfaction has an effect on OCBE
H6: Leadership affects OCBE through Work Satisfaction
H7: Organizational Culture influences OCBE through Work Satisfaction.

3. RESEARCH METHODS

This type of research is a quantitative study using survey methods. The research object is employees of financial institutions (banking, pension fund institutions and insurance) in Jakarta with a sample of 126 people. Data analysis using SEM with the Smart PLS program.

4. RESULT AND DISCUSSION

Evaluation of the Measurement Model (Outer Model) Reflective or Indicator Test.

The evaluation of the measurement model (outer model) is carried out to determine the validity and reliability of the indicator and its latent variables.

4.1. Convergent Validity Testing/Convergent Validity

Convergent validity test is done by examining, among others, individual item reliability, internal consistency or construct reliability and average variance extracted. Individual examination

of item reliability can be seen from the standardized loading factor value. Standardized loading factor describes the magnitude of the correlation between each measurement item (indicator) and its construct. The loading factor value used in this study is >0.5, so if there is a loading factor value <0.5 in the calculation result of the measurement model (outer model), it will be excluded from the model. The results of the calculation of the measurement model using SEM PLS version 3.0, then the loading factor values for all indicators in each research variable have met the value >0.5 as can be seen in Table 1 below.

Convergent validity evaluation from the Average Variance Extracted (AVE) examination illustrates the large variety of manifest variables that can be had by latent constructs. The greater the variety of manifest variables that can be contained by a latent construct, the greater the manifest variable representation of the latent construct. The term Manifest variable is often defined as an indicator. AVE value must be >0.5.

Evaluation of convergent validity from checking internal consistency reliability can be seen from the value of Cronbach's Coefficient Alpha (CA) and Composite Reliability (CR) which shows the consistency value of each indicator in measuring its construct. The expected CA and CR values are >0.7. The results of the measurement of AVE, CA and CR values meet the existing conditions and can be seen in Table 2.

4.2. Discriminant Validity Testing

The discriminant validity test is intended to check the cross loading value, namely the correlation coefficient of the indicator against its own construct compared to the correlation coefficient with other constructs. The correlation coefficient value of the indicator against its own construct must be greater than that of other constructs.

Tables 3-5 show that there are 25 indicators that are proven to show the correlation coefficient value of the construct itself which is greater than other constructs. Statement items that do not meet these criteria are removed from the model.

4.3. Evaluation of the Structural Model (Inner Model) or Hypothesis Testing

Evaluation of the structural model (inner model) or hypothesis testing in this study through the steps of evaluating the path coefficient value, evaluating the value of R2, measuring the effect

Table 1: Convergent validity test result

Variable	Indicator	Group 1		Group 2		Group 3	
		Outer loading	Information	Outer loading	Information	Outer loading	Information
Leadership (X1)	X1.1	0,759	Valid	0,867	Valid	0,838	Valid
	X1.2	0,848	Valid	0,818	Valid	0,874	Valid
	X1.3	0,810	Valid	0,824	Valid	0,870	Valid
	X1.4	0,840	Valid	0,871	Valid	0,914	Valid
	X1.5	0,795	Valid	0,914	Valid	0,804	Valid
	X1.6	0,732	Valid	0,838	Valid	0,779	Valid
Organizational Culture (X2)	X2.1	0,826	Valid	0,864	Valid	0,889	Valid
	X2.2	0,779	Valid	0,843	Valid	0,852	Valid
	X2.3	0,851	Valid	0,886	Valid	0,935	Valid
	X2.4	0,880	Valid	0,866	Valid	0,892	Valid
	X2.5	0,829	Valid	0,848	Valid	0,898	Valid
	X2.6	0,841	Valid	0,783	Valid	0,816	Valid
	X2.7	0,888	Valid	0,877	Valid	0,929	Valid
Work Satisfaction (Y1)	Y1.1	0,853	Valid	0,911	Valid	0,907	Valid
	Y1.2	0,860	Valid	0,890	Valid	0,943	Valid
	Y1.3	0,878	Valid	0,854	Valid	0,922	Valid
	Y1.4	0,828	Valid	0,880	Valid	0,898	Valid
	Y1.5	0,917	Valid	0,900	Valid	0,936	Valid
	Y1.6	0,817	Valid	0,878	Valid	0,896	Valid
OCBE (Y2)	Y2.1	0,752	Valid	0,891	Valid	0,868	Valid
	Y2.2	0,912	Valid	0,836	Valid	0,922	Valid
	Y2.3	0,668	Valid	0,782	Valid	0,787	Valid
	Y2.4	0,681	Valid	0,786	Valid	0,780	Valid
	Y2.5	0,856	Valid	0,853	Valid	0,899	Valid
	Y2.6	0,805	Valid	0,821	Valid	0,849	Valid

Source : Primary Data Processed (2020)

Table 2: Value of average variance extracted (AVE), Cronbach's coefficient alpha (CA) and composite reliability (CR)

Variable	Group 1			Group 2			Group 3		
	AVE	CA	CR	AVE	CA	CR	AVE	CA	CR
Leadership (X1)	0,638	0,887	0,913	0,733	0,927	0,943	0,719	0,921	0,939
Organizational culture (X2)	0,710	0,932	0,945	0,727	0,937	0,949	0,789	0,955	0,963
Work satisfaction (Y1)	0,739	0,929	0,944	0,784	0,945	0,956	0,841	0,962	0,970
OCBE (Y2)	0,615	0,871	0,904	0,687	0,909	0,929	0,727	0,924	0,941

Source: Primary Data Processed (2020)

Table 3: Result of discriminant validity group 1 testing

Indicator	Leadership (X1)	OCBE (Y2)	Organizational culture (X2)	Work satisfaction (Y1)	Result
X1.1	**0,759**	0,432	0,508	0,485	Valid
X1.2	**0,848**	0,660	0,673	0,613	Valid
X1.3	**0,810**	0,617	0,756	0,590	Valid
X1.4	**0,840**	0,547	0,667	0,475	Valid
X1.5	**0,795**	0,525	0,445	0,461	Valid
X1.6	**0,732**	0,371	0,554	0,392	Valid
X2.1	0,669	0,813	**0,826**	0,727	Valid
X2.2	0,562	0,604	**0,779**	0,616	Valid
X2.3	0,611	0,705	**0,851**	0,763	Valid
X2.4	0,709	0,646	**0,880**	0,659	Valid
X2.5	0,609	0,567	**0,829**	0,636	Valid
X2.6	0,583	0,696	**0,841**	0,745	Valid
X2.7	0,738	0,784	**0,888**	0,853	Valid
Y1.1	0,445	0,806	0,615	**0,853**	Valid
Y1.2	0,677	0,811	0,835	**0,860**	Valid
Y1.3	0,510	0,795	0,722	**0,878**	Valid
Y1.4	0,546	0,791	0,763	**0,828**	Valid
Y1.5	0,489	0,762	0,736	**0,917**	Valid
Y1.6	0,623	0,729	0,711	**0,817**	Valid
Y2.1	0,486	**0,752**	0,658	0,704	Valid
Y2.2	0,586	**0,912**	0,701	0,721	Valid
Y2.3	0,354	**0,668**	0,528	0,705	Valid
Y2.4	0,560	**0,681**	0,678	0,772	Valid
Y2.5	0,569	**0,856**	0,676	0,722	Valid
Y2.6	0,587	**0,805**	0,601	0,622	Valid

Source: Primary Data Processed (2020)

Table 4: Result of discriminant validity group 2 testing

Indicator	Leadership (X1)	OCBE (Y2)	Organizational Culture (X2)	Work Satisfaction (Y1)	Result
X1.1	**0,867**	0,6648	0,6604	0,6675	Valid
X1.2	**0,818**	0,6665	0,5995	0,6273	Valid
X1.3	**0,824**	0,6232	0,6927	0,6571	Valid
X1.4	**0,871**	0,6394	0,6346	0,6184	Valid
X1.5	**0,914**	0,7421	0,6815	0,7171	Valid
X1.6	**0,838**	0,6928	0,7392	0,6672	Valid
X2.1	0,6597	0,8053	**0,864**	0,7548	Valid
X2.2	0,6234	0,7289	**0,843**	0,7309	Valid
X2.3	0,6717	0,8692	**0,886**	0,8309	Valid
X2.4	0,6686	0,7684	**0,866**	0,7415	Valid
X2.5	0,6727	0,7179	**0,848**	0,7367	Valid
X2.6	0,6311	0,6981	**0,783**	0,7398	Valid
X2.7	0,7304	0,8425	**0,877**	0,8353	Valid
Y1.1	0,6934	0,8595	0,7852	**0,911**	Valid
Y1.2	0,7231	0,8501	0,8706	**0,89**	Valid
Y1.3	0,6979	0,778	0,7462	**0,854**	Valid
Y1.4	0,662	0,9069	0,8401	**0,88**	Valid
Y1.5	0,6036	0,8323	0,7609	**0,9**	Valid
Y1.6	0,7158	0,8673	0,7775	**0,878**	Valid
Y2.1	0,75	**0,891**	0,8784	0,9291	Valid
Y2.2	0,5994	**0,836**	0,7434	0,7482	Valid
Y2.3	0,5343	**0,782**	0,6896	0,7371	Valid
Y2.4	0,6582	**0,786**	0,7416	0,8254	Valid
Y2.5	0,6911	**0,853**	0,7717	0,7921	Valid
Y2.6	0,6551	**0,821**	0,6926	0,7153	Valid

Source: Primary Data Processed (2020)

size f2, validating the overall structural model with the Goodness of Fit Index (GoF), as well as conducting predictive relevance (Q2) testing.

4.4. Evaluating the Path Coefficient Value

To evaluate the path coefficient value, based on the results of calculations using the calculate SmartPLS version 3.0 bootstrapping, the path coefficient results are obtained which describe the strength of the relationship or influence between constructs/variables as shown in Table 6.

Table 6 shows that in group 1 the pathway that has the greatest influence is the Organizational Culture pathway to Work Satisfaction, while the pathway that has the least effect is the

Table 5: Result of discriminant validity group 3 testing

Indicator	Leadership (X1)	OCBE (Y2)	Organizational Culture (X2)	Work Satisfaction (Y1)	Result
X1.1	**0,838**	0,6207	0,5882	0,6234	Valid
X1.2	**0,874**	0,7285	0,6945	0,7126	Valid
X1.3	**0,87**	0,7206	0,7554	0,7093	Valid
X1.4	**0,914**	0,7145	0,7274	0,7027	Valid
X1.5	**0,804**	0,6461	0,5584	0,5852	Valid
X1.6	**0,779**	0,5998	0,6476	0,609	Valid
X2.1	0,6889	0,8093	**0,889**	0,7929	Valid
X2.2	0,6545	0,7328	**0,852**	0,7733	Valid
X2.3	0,7541	0,8957	**0,935**	0,9099	Valid
X2.4	0,7109	0,8034	**0,892**	0,8011	Valid
X2.5	0,6931	0,7702	**0,898**	0,8	Valid
X2.6	0,5511	0,7573	**0,816**	0,7531	Valid
X2.7	0,8017	0,9072	**0,929**	0,9041	Valid
Y1.1	0,6833	0,8536	0,7913	**0,907**	Valid
Y1.2	0,788	0,9253	0,9533	**0,943**	Valid
Y1.3	0,6786	0,9046	0,8628	**0,922**	Valid
Y1.4	0,6588	0,8957	0,8447	**0,898**	Valid
Y1.5	0,7093	0,8526	0,8101	**0,936**	Valid
Y1.6	0,7596	0,8293	0,8179	**0,896**	Valid
Y2.1	0,486	**0,752**	0,658	0,704	Valid
Y2.2	0,586	**0,912**	0,701	0,721	Valid
Y2.3	0,354	**0,668**	0,528	0,705	Valid
Y2.4	0,560	**0,681**	0,678	0,772	Valid
Y2.5	0,569	**0,856**	0,676	0,722	Valid
Y2.6	0,587	**0,805**	0,601	0,622	Valid

Source: Primary Data Processed (2020)

Table 6: Path coefficient for Group 1, Group 2 and Group 3

Relations between variables	Group 1	Group 2	Group 3
	Path coefficient	Path coefficient	Path coefficient
Leadership (X1) -> Work Satisfaction (Y1)	−0,023	0,172	0,135
Organizational Culture (X2) -> Work Satisfaction (Y1)	0,871	0,767	0,819
Leadership (X1) -> OCBE (Y2)	0,126	0,065	0,100
Organizational Culture (X2) -> OCBE (Y2)	0,075	0,223	0,168
Work Satisfaction (Y1) -> OCBE (Y2)	0,767	0,709	0,724

Source: Primary data processed (2020)

Leadership pathway to Work Satisfaction. In group 2, the pathway that has the greatest influence is the Organizational Culture pathway to Work Satisfaction, while the pathway that has the least effect is the Leadership path towards OCBE. Whereas in group 3 the pathway that has the greatest influence is the Organizational Culture pathway on Work Satisfaction, while the pathway that has the least effect is the Leadership path towards OCBE. Calculation result of the path coefficient for the Measurement Model (Inner Model) for Groups 1-3 are presented in Figures 1-3.

4.5. Evaluating R2 Value

The value of R2 shows the level of determination of the exogenous variables (internal factors and external factors) to the endogenous variables (entrepreneurial cognition and entrepreneurial interest). The results of R2 calculation can be seen in Table 7.

The provisions regarding R2 are as follows:
1. The R2 value of 0.67 is categorized as strong
2. The R2 value of 0.33 is categorized as moderate
3. The R2 value of 0.19 is categorized as weak.

Table 8 shows that in group 1, the leadership and organizational learning variables have a weak effect at the structural level on OCBE variables, while work satisfaction has a strong influence at the structural level on OCBE. In addition, leadership also has a weak influence at the structural level on the work satisfaction variable, and organizational culture variables have a strong influence on the structural level on the work satisfaction variable. In group 2, the leadership variable has a weak influence at the structural level on the OCBE variable, the organizational culture variable has a moderate effect at the structural level on the OCBE variable, while work satisfaction has a strong influence at the structural level on OCBE. In

Table 7: Test results for R square Group 1, Group 2 and Group 3

Path	R square	R square adjusted	F count	F table
Group 1				
Work satisfaction	0,728	0,714	33,902	2,852
OCBE	0,845	0,833	69,054	2,852
Group 2				
Work satisfaction	0,824	0,815	59,303	2,852
OCBE	0,936	0,931	185,250	2,852
Group 3				
Work satisfaction	0,863	0,856	79,791	2,852
OCBE	0,926	0,921	158,505	2,852

Source: Primary data processed (2020)

Table 8: Test results for the effect size (f square) of Group 1, Group 2 and Group 3

Variabel	Group 1		Group 2		Group 3	
	Work Satisfaction (Y1)	OCBE (Y2)	Work Satisfaction (Y1)	OCBE (Y2)	Work Satisfaction (Y1)	OCBE (Y2)
Leadership (X1)	0,001	0,043	0,066	0,024	0,051	0,05
Organizational culture (X2)	1,167	0,007	1,307	0,131	1,89	0,051
Work satisfaction (Y1)		1,034		1,375		0,973

Source: Primary data processed (2020)

addition, leadership also has a weak influence at the structural level on the work satisfaction variable, and organizational culture variables have a strong influence on the structural level on the work satisfaction variable. Whereas in group 3, the leadership and organizational learning variables had a weak influence at the structural level on OCBE variables, while work satisfaction had a strong influence at the structural level on OCBE. In addition, leadership also has a weak influence at the structural level on the work satisfaction variable, and organizational culture variables have a strong influence on the structural level on the work satisfaction variable.

4.8. Evaluating the Goodness of Fit Index (GoF) and Predictive Relevance (Q2)

The Goodness of Fit Index (GoF) test is to validate the combined performance of the measurement model (outer model) and structural model (inner model). The terms of the GoF category are small GoF = 0.1, medium GoF = 0.25 and large GoF = 0.36. Predictive relevance (Q2) testing is useful for validating the model. If the endogenous latent variable has a predictive relevance (Q2) value >0 (zero), then the exogenous latent variable can be considered capable of predicting its endogenous variable or it can be said that this model is considered to have good predictive relevance. The GoF and Q2 test results can be seen in Table 9.

Table 9 shows that the results of the calculation of the Goodness of Fit Index (GoF) Group 1 show a value of 0.804. Based on these results, it can be concluded that the combined performance of the measurement model (outer model) and the structural model (inner model) is a large GoF, because the Goodness of Fit Index (GoF) value is more than 0.36 (large scale GoF). The results of the calculation of the Goodness of Fit Index (GoF) Group 2 show a value of 0.851. Based on these results, it can be concluded that the combined performance of the measurement model (outer model) and the structural model (inner model) is a strong GoF, because the Goodness of Fit Index (GoF) value is more than 0.36 (large scale GoF). The results of the calculation of the Goodness of Fit Index (GoF) Group 3 show a value of 0.872. Based on these results, it can be concluded that the combined performance of the measurement model (outer model) and the structural model (inner model) is a strong GoF, because the Goodness of Fit Index (GoF) value is more than 0.36 (large scale GoF).

The predictive relevance (Q2) calculation results show a value of 0.958 for Group 1, 0.989 for Group 2, and a value of 0.99 for Group 3. In this research model, endogenous latent variables have a predictive relevance (Q2) value >0 (zero) so that exogenous latent variables as explanatory variables are able to predict the endogenous variables, namely entrepreneurial interest, or in other words prove that this model is considered to have good predictive relevance, both in Groups 1, 2 and 3.

Table 9: The GoF and Q2 Test Results for Group 1, Group 2 and Group 3

Measurement type	Group 1		Group 2		Group 3	
	GoF	Q2	GoF	Q2	GoF	Q2
The calculation results	0,804	0,958	0,851	0,989	0,872	0,990
Interpretation	Big	Well	Big	Well	Big	Well

Source: Primary data processed (2020)

4.9. Research Hypothesis Testing Results

In the structural model, nine hypotheses of the relationship between variables (direct effect) are tested.

The complete results of testing the relationship between the research variables are presented in Tables 10 and 11:

4.10. Explanation of Each Hypothesis in Group 1 (Banking)

4.10.1. Hypothesis 1: Leadership affects work satisfaction

Hypothesis testing with the PLS approach results in the path coefficient of the influence of Leadership on Work Satisfaction, which has no significant effect, with a path coefficient of −0.023 with a P = 0.824. Because the P > 0.05, there is sufficient empirical evidence to accept H0: which states that leadership has no significant effect on work satisfaction. The dominant dimension influencing is Leader member relations. Employees state that there is good communication between leaders and employees.

4.10.2. Hypothesis 2: Organizational culture affects work satisfaction

Hypothesis testing using the PLS approach resulted in a path coefficient of the influence of Organizational Culture on Work Satisfaction with a significant path coefficient of 0.871 with P = 0.000. Since the P < 0.05, there is sufficient empirical evidence to accept H1: which states that Organizational Culture has a significant effect on Work Satisfaction. The positive coefficient indicates that the higher the Organizational Culture, the higher the Work Satisfaction. In this study, the most influential dimension is related to performance. Employees at work have prioritized quality in completing their work.

4.10.3. Hypothesis 3: Leadership has an effect on OCBE

Hypothesis testing with the PLS approach resulted in the path coefficient of the influence of Leadership on OCBE which had no significant effect with a path coefficient of 0.126 with P = 0.273. Because the P > 0.05, there is sufficient empirical evidence to accept H0: which states that leadership has no significant effect on OCBE. The less influential dimension is the leader's assertiveness in making decisions.

Table 10: Research hypothesis testing results (direct effect)

Hypothesis	Relations between variables	Original sample (O)	Standard deviation (STDEV)	t statistics (|O/STDEV|)	P values	Information
Group 1						
H1	Leadership (X1) -> Work Satisfaction (Y1)	−0,023	0,103	0,223	0,824	Not significant
H2	Organizational Culture (X2) -> Work Satisfaction (Y1)	0,871	0,069	12,591	0,000	Significant
H3	Leadership (X1) -> OCBE (Y2)	0,126	0,114	1,107	0,273	Not significant
H4	Organizational Culture (X2) -> OCBE (Y2)	0,075	0,107	0,702	0,486	Not significant
H5	Work Satisfaction (Y1) -> OCBE (Y2)	0,767	0,112	6,831	0,000	Significant
Group 2						
H1	Leadership (X1) -> Work Satisfaction (Y1)	0,172	0,110	1,564	0,124	Not significant
H2	Organizational Culture (X2) -> Work Satisfaction (Y1)	0,767	0,085	9,006	0,000	Significant
H3	Leadership (X1) -> OCBE (Y2)	0,065	0,070	0,931	0,357	Not significant
H4	Organizational Culture (X2) -> OCBE (Y2)	0,223	0,075	2,986	0,004	Significant
H5	Work Satisfaction (Y1) -> OCBE (Y2)	0,709	0,090	7,880	0,000	Significant
Group 3						
H1	Leadership (X1) -> Work Satisfaction (Y1)	0,135	0,087	1,546	0,128	Not significant
H2	Organizational Culture (X2) -> Work Satisfaction (Y1)	0,819	0,064	12,882	0,000	Significant
H3	Leadership (X1) -> OCBE (Y2)	0,100	0,074	1,366	0,178	Not significant
H4	Organizational Culture (X2) -> OCBE (Y2)	0,168	0,118	1,426	0,160	Not significant
H5	Work Satisfaction (Y1) -> OCBE (Y2)	0,724	0,121	5,974	0,000	Significant

P<0,05 = significant at 0.05 level. Source: Primary data processed (2020)

Table 11: Results of indirect effect testing

Hypothesis	Relationship	Coefficient	Information	Conclusion
Group 1				
H6	Leadership -> Work Satisfaction -> OCBE	−0.0176	Leadership -> Work Satisfaction (Non Sig.), Work Satisfaction -> OCBE (Sig.)	Not significant
H7	Organizational Culture -> Work Satisfaction -> OCBE	0.668	Organizational Culture -> Work Satisfaction (Sig.), Work Satisfaction -> OCBE (Sig.)	Significant
Group 2				
H6	Leadership -> Work Satisfaction -> OCBE	0.122	Leadership -> Work Satisfaction (Non Sig.), Work Satisfaction -> OCBE (Sig.)	Not significant
H7	Organizational Culture -> Work Satisfaction -> OCBE	0.544	Organizational Culture -> Work Satisfaction (Sig.), Work Satisfaction -> OCBE (Sig.)	Significant
Group 3				
H6	Leadership -> Work Satisfaction -> OCBE	0.098	Leadership -> Work Satisfaction (Non Sig.), Work Satisfaction -> OCBE (Sig.)	Not significant
H7	Organizational Culture -> Work Satisfaction -> OCBE	0.593	Organizational Culture -> Work Satisfaction (Sig.), Work Satisfaction -> OCBE (Sig.)	Significant

Source: Primary data processed (2020)

4.10.4. Hypothesis 4: Organizational culture affects OCBE

Hypothesis testing using the PLS approach resulted in a path coefficient of the influence of Organizational Culture on OCBE with a significant path coefficient of 0.129 0.075 with a P = 0.486. Because the P > 0.05, there is sufficient empirical evidence to accept H0: which states that Organizational Culture has no significant effect on OCBE. The weak dimension in this study is trust. Employees stated that they were still lacking in developing themselves and their abilities.

4.10.5. Hypothesis 5: Work motivation affects OCBE

Hypothesis testing with the PLS approach produces a path coefficient of the effect of Work Motivation on OCBE with a significant effect with a path coefficient of 0.767 with P = 0.000. Since the P < 0.05, there is sufficient empirical evidence to accept H1: which states that Work Motivation has a significant effect on OCBE. The positive coefficient indicates that the higher the Work Motivation, the higher the OCBE. Employees state that they have carried out Eco Initiatives, for example by turning off electricity when not needed.

4.10.6. Hypothesis 6: Leadership affects OCBE through work satisfaction

Hypothesis testing with the PLS approach produces a path coefficient of the influence of Leadership on OCBE through Work Satisfaction, which has no significant effect with a path coefficient of −0.0176. Since the two direct influences that form the indirect effect are one of which is insignificant, namely the influence of Leadership on Work Satisfaction, there is sufficient empirical evidence to accept H0: which states that Leadership has an effect on OCBE without going through Work Satisfaction. So that the Work Satisfaction variable is not a mediating variable in the relationship between Leadership and OCBE. Thus the H1 hypothesis in this study which states that "Leadership has a positive and significant

Figure 1: Calculation result of the path coefficient for the measurement model (Inner Model) Group 1

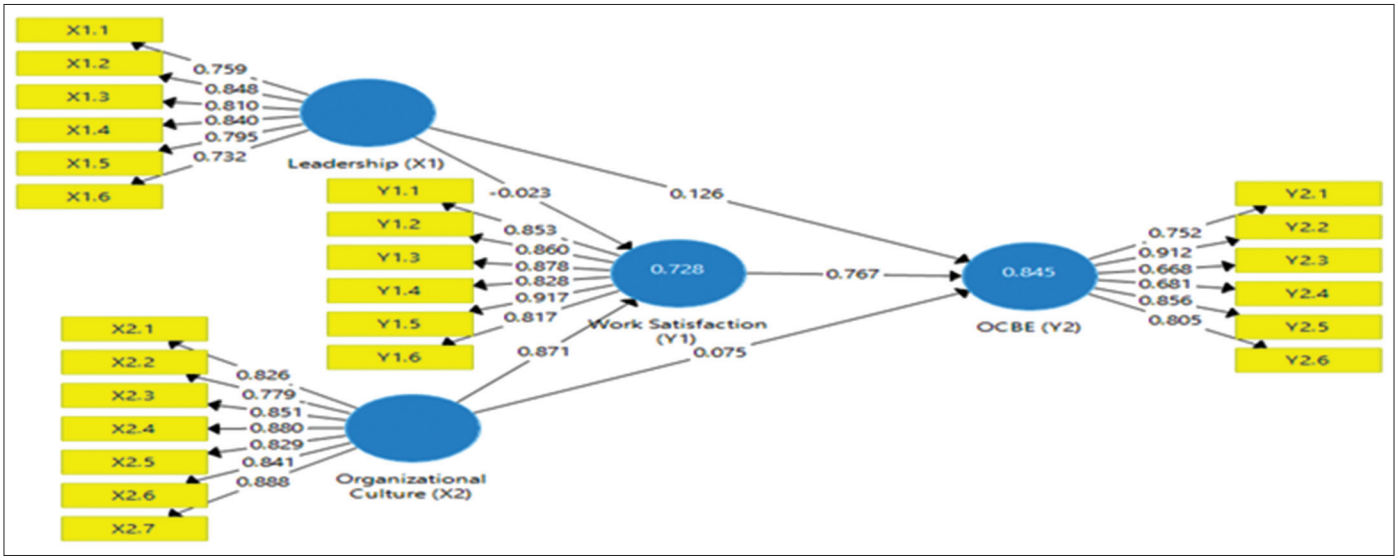

Figure 2: Calculation results of the path coefficient for the measurement model (Inner Model) Group 2

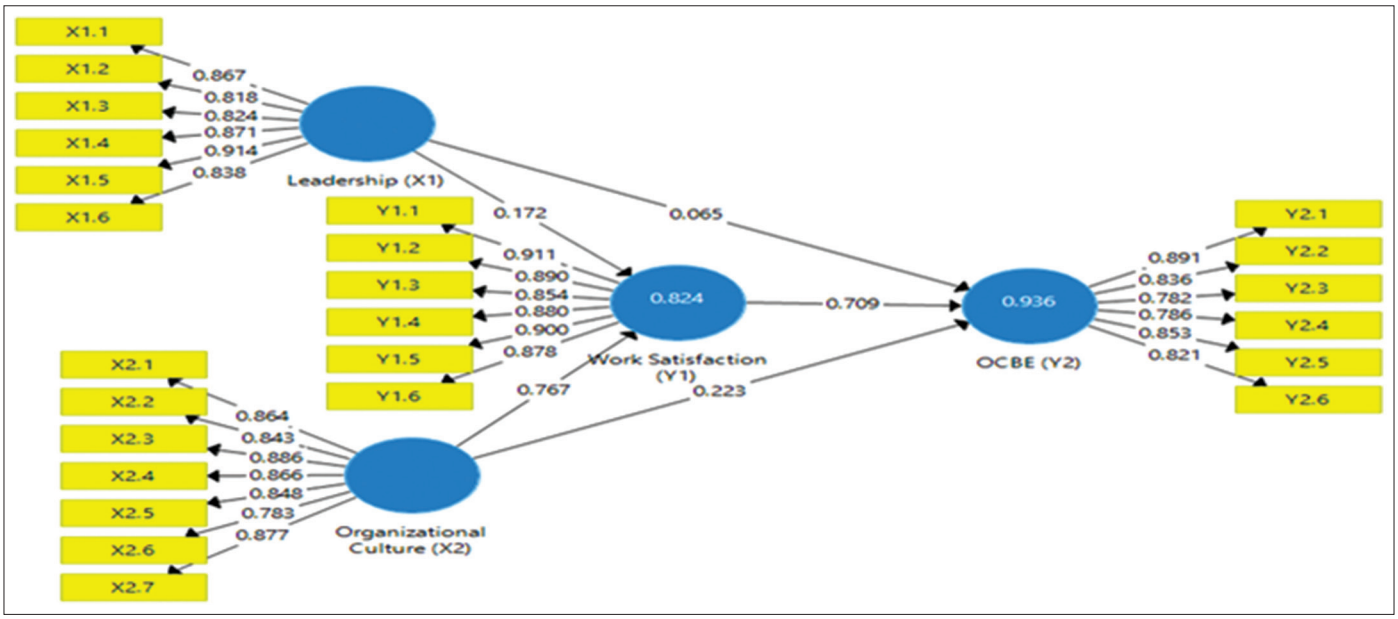

effect on OCBE through Work Satisfaction" is rejected. The weak dimension is related to work protection for employees.

4.10.7. Hypothesis 7: Organizational cuture affects OCBE through work satisfaction

Hypothesis testing with the PLS approach produces a path coefficient of the influence of Organizational Cuture on OCBE through Work Satisfaction with a significant effect with a path coefficient of 0.668. Since the two direct influences that form are significant, there is sufficient empirical evidence to accept H1: which states that Organizational Cuture has a positive and significant effect on OCBE through Work Satisfaction. The positive coefficient indicates that the higher the Organizational Cuture, the higher the OCBE through the increase in the Work Satisfaction pathway. The Work Satisfaction variable is a perfect mediation variable in the relationship between Organizational Cuture and OCBE, because the coefficient of direct influence between Organizational Cuture on OCBE is not significant. Perfect mediation means that the Organizational Cuture variable does not explain the diversity of the OCBE variable, but the Work Satisfaction variable which explains the diversity of OCBE variables in the relationship between Organizational Cuture and OCBE.

Thus the H1 hypothesis in this study which states that "Organizational Culture has a positive and significant effect on OCBE through Work Satisfaction" is accepted. This study proves that there is harmony in the work relationship between employees and management.

4.11. Explanation of each Hypothesis in Group 2 (Pension Fund Institutions)

4.11.1. Hypothesis 1: Leadership affects work satisfaction

Hypothesis testing with the PLS approach results in the path coefficient of the influence of Leadership on Work Satisfaction

Figure 3: Calculation results of the path coefficient for the measurement model (Inner Model) Group 3

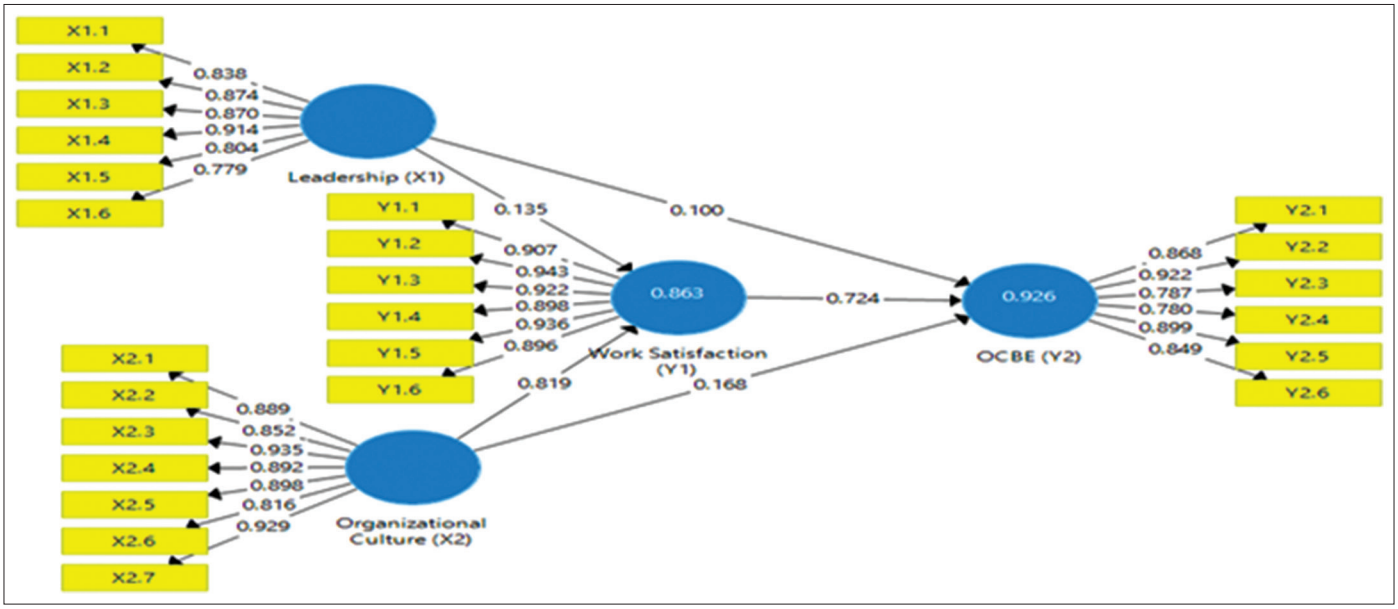

with no significant effect, with a path coefficient of 0.172 with P = 0.124. Because the P > 0.05, there is sufficient empirical evidence to accept H0: which states that leadership has no significant effect on work satisfaction.

4.11.2. Hypothesis 2: Organizational culture affects work satisfaction

Hypothesis testing with the PLS approach produces a path coefficient of the influence of Organizational Culture on Work Satisfaction with a significant effect with a path coefficient of 0.767 with a P = 0.000. Since the P < 0.05, there is sufficient empirical evidence to accept H2: which states that Organizational Culture has a significant effect on Work Satisfaction. The positive coefficient indicates that the higher the Organizational Culture, the higher the Work Satisfaction. Based on the research, it was proven that the employees were active in completing their work and did not always depend on the leadership.

4.11.3. Hypothesis 3: Leadership has an effect on OCBE

Hypothesis testing with the PLS approach resulted in a path coefficient of the influence of Leadership on OCBE which had no significant effect with a path coefficient of 0.065 with P = 0.357. Because the P > 0.05, there is sufficient empirical evidence to accept H0: which states that leadership has no significant effect on OCBE.

The less influential dimension related to leadership is related to Leader member relations. Where employees feel a lack of communication between leaders and employees.

4.11.4. Hypothesis 4: Organizational culture affects OCBE

Hypothesis testing with the PLS approach resulted in a path coefficient of the influence of Organizational Culture on OCBE with a significant path coefficient of 0.223 with P = 0.004. Because the P < 0.05, there is sufficient empirical evidence to accept H4: which states that Organizational Culture has a significant effect on OCBE. The positive coefficient indicates that the higher the Organizational Culture, the higher the OCBE. The research dimension that needs to be improved for organizational culture is personality, that is, each employee is expected to respect each other's differences of opinion.

4.11.5. Hypothesis 5: Work motivation affects OCBE

Hypothesis testing with the PLS approach results in a path coefficient of the effect of Work Motivation on OCBE with a significant path coefficient of 0.709 with P = 0.000. Since the P < 0.05, there is sufficient empirical evidence to accept H5: which states that Work Motivation has a significant effect on OCBE. The positive coefficient indicates that the higher the Work Motivation, the higher the OCBE. OCBE dimensions that need improvement related to Eco Civic Engagement. Employees stated that they were not up to date regarding information about the environment carried out by the organization.

4.11.6. Hypothesis 6: Leadership affects OCBE through work satisfaction

Hypothesis testing with the PLS approach produces a path coefficient of the influence of Leadership on OCBE through Work Satisfaction, which has no significant effect with a path coefficient of 0.122. Since the two direct influences that form the indirect effect are one of which is insignificant, namely the influence of Leadership on Work Satisfaction, there is sufficient empirical evidence to accept H0: which states that Leadership has an effect on OCBE without going through Work Satisfaction. So that the Work Satisfaction variable is not a mediating variable in the relationship between Leadership and OCBE. Thus, the hypothesis H6 in this study which states that "Leadership has a positive and significant effect on OCBE through Work Satisfaction" is rejected. The dimension that is less influential regarding job satisfaction is the existence of job protection.

4.11.7. Hypothesis 7: Organizational cuture affects OCBE through work satisfaction

Hypothesis testing with the PLS approach produces a path coefficient of the influence of Organizational Cuture on OCBE

through Work Satisfaction with a significant effect with a path coefficient of 0.544. Since the two direct effects that form are significant, there is sufficient empirical evidence to accept H7: which states that Organizational Cuture has a positive and significant effect on OCBE through Work Satisfaction. The positive coefficient indicates that the higher the Organizational Cuture, the higher the OCBE through the increase in the Work Satisfaction pathway. The Work Satisfaction variable is a partially mediating variable in the relationship between Organizational Cuture and OCBE, because the direct influence coefficient between Organizational Cuture on OCBE is smaller than the indirect effect coefficient. Partially mediation means that the Work Satisfaction variable plays a role in strengthening the relationship between Organizational Cuture Variables and OCBE. Thus the hypothesis H7 in this study which states that "Organizational Culture has a positive and significant effect on OCBE through Work Satisfaction" is accepted. The results of this study prove that there is harmony in the interaction between superiors and superiors.

4.12. Explanation of Each Hypothesis in Group 3 (Insurance)

4.12.1. Hypothesis 1: Leadership affects work satisfaction

Hypothesis testing with the PLS approach results in the path coefficient of the influence of Leadership on Work Satisfaction with no significant effect, with a path coefficient of 0.135 with P = 0.128. Because the P > 0.05, there is sufficient empirical evidence to accept H0: which states that leadership has no significant effect on work satisfaction. According to employee statements, leaders are still not firm in making decisions. This is what makes employees dissatisfied.

4.12.2. Hypothesis 2: Organizational culture affects work satisfaction

Hypothesis testing with the PLS approach produces a path coefficient of the influence of Organizational Culture on Work Satisfaction with a significant path coefficient of 0.819 with P = 0.000. Since the P < 0.05, there is sufficient empirical evidence to accept H2: which states that Organizational Culture has a significant effect on Work Satisfaction. The positive coefficient indicates that the higher the Organizational Culture, the higher the Work Satisfaction. Research shows that employees are more active in completing their work.

4.12.3. Hypothesis 3: Leadership has an effect on OCBE

Hypothesis testing using the PLS approach results in the path coefficient of the influence of Leadership on OCBE which has no significant effect with a path coefficient of 0.1 with P = 0.178. Because the P > 0.05, there is sufficient empirical evidence to accept H0: which states that leadership has no significant effect on OCBE.

4.12.4. Hypothesis 4: Organizational culture affects OCBE

Hypothesis testing with the PLS approach resulted in a path coefficient of the influence of Organizational Culture on OCBE with a significant path coefficient of 0.168 with P = 0.16. Because the P > 0.05, there is sufficient empirical evidence to accept H0: which states that Organizational Culture has no significant effect on OCBE. This study proves that there is still a lack of respect for differences of opinion in organizations.

4.12.5. Hypothesis 5: Work motivation affects OCBE

Hypothesis testing with the PLS approach resulted in a path coefficient of the effect of Work Motivation on OCBE with a significant effect with a path coefficient of 0.724 with P = 0.000. Since the P < 0.05, there is sufficient empirical evidence to accept H5: which states that Work Motivation has a significant effect on OCBE. The positive coefficient indicates that the higher the Work Motivation, the higher the OCBE. In work motivation, the most influencing dimension is the member dimension, full of initiative and aggressiveness, that is, employees are more active in completing their tasks.

4.12.6. Hypothesis 6: Leadership affects OCBE through work satisfaction

Hypothesis testing with the PLS approach produces a path coefficient of the influence of Leadership on OCBE through Work Satisfaction, which has no significant effect with a path coefficient of 0.098.

Since the two direct influences that form the indirect effect are one of which is insignificant, namely the influence of Leadership on Work Satisfaction, there is sufficient empirical evidence to accept H0: which states that Leadership has an effect on OCBE without going through Work Satisfaction. So that the Work Satisfaction variable is not a mediating variable in the relationship between Leadership and OCBE. Thus the H1 hypothesis in this study which states that "Leadership has a positive and significant effect on OCBE through Work Satisfaction" is rejected. Employees stated that the protection of work at their company was still not optimal.

4.12.7. Hypothesis 7: Organizational cuture affects OCBE through work satisfaction

Hypothesis testing with the PLS approach produces a path coefficient of the influence of Organizational Cuture on OCBE through Work Satisfaction with a significant effect with a path coefficient of 0.593. Since the two direct effects that form are significant, there is sufficient empirical evidence to accept H7: which states that Organizational Cuture has a positive and significant effect on OCBE through Work Satisfaction. The positive coefficient indicates that the higher the Organizational Cuture, the higher the OCBE through the increase in the Work Satisfaction pathway. The Work Satisfaction variable is a perfect mediation variable in the relationship between Organizational Cuture and OCBE, because the coefficient of direct influence between Organizational Cuture on OCBE is not significant. Perfect mediation means that the Organizational Cuture variable does not explain the diversity of the OCBE variable, but the Work Satisfaction variable which explains the diversity of OCBE variables in the relationship between Organizational Cuture and OCBE. Thus the H1 hypothesis in this study which states that "Organizational Culture has a positive and significant effect on OCBE through Work Satisfaction" is accepted.

5. CONCLUSIONS AND SUGGESTIONS

This research proves

1. Leadership has no effect on Work Satisfaction in all groups
2. Organizational Culture affects Work Satisfaction in all groups

3. Leadership has no effect on OCBE in all groups
4. Organizational Culture affects OCBE in group 2 and vice versa in groups 1 and 3
5. Work Satisfaction affects OCBE in all groups
6. Leadership has no effect on OCBE through Work Satisfaction in all groups
7. Organizational Culture influences OCBE through Work Satisfaction in all groups

Suggestions for organizations are:

1. To improve the leadership abilities of employees, organizations can conduct Leadership training.
2. In order to improve employee competence, management can conduct training related to employee soft skills and hard skills.
3. Organizations can improve the work protection system for their employees, for example related to work contracts and employee occupational safety and health.
4. Organizations can improve information systems and update information about the environment.
5. For future researchers, it is hoped that they can develop a research framework and examine other variables related to Organizational Citizenship Behavior for the Environment (OCBE).

REFERENCES

Arifin, H.M. (2015), The influence of competence, motivation, and organisational culture to high school teacher job satisfaction and performance. International Education Studies, 8(1), 38-45.

Atmojo, M. (2015), The influence of transformational leadership on job satisfaction, organizational commitment, and employee performance. International Research Journal of Business Studies, 5(2), 1-10.

Belias, D., Koustelios, A. (2014), Organizational culture and job satisfaction: A review. International Review of Management and Marketing, 4(2), 132-149.

Boiral, O., Paillé, P. (2012), Organizational citizenship behaviour for the environment: Measurement and validation. Journal of Business Ethics, 109(4), 431-445.

Boiral, O., Talbot, D., Paillé, P. (2015), Leading by example: A model of organizational citizenship behavior for the environment. Business Strategy and the Environment, 24(6), 532-550.

Busro, M. (2018), Teori-teori Manajemen Sumber Daya Manusia. Jakarta: Prenadamedia Group.

Chithra, M., Yothi, P.J. (2017), Eco-civic engagement-a dimension of OCBE. International Journal of Human Resource Development and Management, 7(1), 1-12.

Han, Z., Wang, Q., Yan, X. (2019), How responsible leadership motivates employees to engage in organizational citizenship behavior for the environment: A double-mediation model. Sustainability, 11(3), 605.

Hari Patworo, L., Bernadeta, I. (2017), Organization Citizenship Behavior for the Environment (OCB-E) Karyawan Perusahaan Perbankan di Semarang. United States: Forum Manajemen Indonesia.

Ju, S.Y., Azlinna, A., Thurasamy, R. (2015), Environmental leadership and employees' organizational citizenship behavior towards the environment (OCBE): Psychological distance as a moderating variable. In: Advances in Global Business Research: Proceedings of the 12th Annual World Congress of the Academy for Global Business Advancement (AGBA). Turkey: Academy for Global Business Advancement. p16-9.

Mansur, A., Nurfitri, T., Mukti, M.A., Tohir, M.. (2019), The role of job satisfaction on the relationship between self-leadership and organizational citizenship behaviour. Journal of Research in Management, 2(2), 7-13.

Nawangsari, L.C., Sutawidjaya, A.H. (2019), How the green human resources management (GHRM) process can be adopted for the organization business? In: 1st International Conference on Economics, Business, Entrepreneurship, and Finance (ICEBEF 2018). Hong Kong: Atlantis Press.

Paillé, P., Raineri, N. (2015), Linking perceived corporate environmental policies and employees eco-initiatives: The influence of perceived organizational support and psychological contract breach. Journal of Business Research, 68(11), 2404-2411.

Pham, N.T., Phan, Q.P.T., Tučková, Z., Vo, N., Nguyen, L.H. (2018), Enhancing the organizational citizenship behavior for the environment: The roles of green training and organizational culture. Management and Marketing, Challenges for the Knowledge Society, 13(4), 1174-1189.

Robbins, S.P., dan Judge, T.A. (2015), Perilaku Organisasi. Jakarta: Salemba Empat.

Robbins, S.P., Timothy, A., Judge, A. (2018), Essentials of Organizational Behavior. 14th ed. United Kingdom: Pearson.

Sutrisno, E. (2017), Manajemen Sumber Daya Manusia. Jakarta: Prenadamedia Group.