International Journal of Energy Economics and Policy

ISSN: 2146-4553

available at http: www.econjournals.com

International Journal of Energy Economics and Policy, 2023, 13(3), 262-270.

Impact of Quantum Movement Theory on Energy Policy

Cooper R. Wade[1,2]*, Olusegun S. Tomomewo[1]

[1]Institute for Energy Studies, Grand Forks, North Dakota 58202 USA, [2]Grid Power, Little Rock, Arkansas 72205 USA.
*Email: cooper.wade@und.edu

Received: 21 January 2023 **Accepted:** 27 April 2023 **DOI:** https://doi.org/10.32479/ijeep.14241

ABSTRACT

The Federal Energy Regulatory Commission (FERC) has been tasked with ensuring that the United States of America maintains a reliable electric grid that provides its citizens with affordable power and energy security. This responsibility of regulating electric energy delivery comes with the ability to charge and collect Interstate Commerce Tax. In this ability, is the separation of state and federal regulatory of electricity transactions, which is a contested topic in the U.S. Supreme Court. The reason for this is that FERC is trying to enforce Interstate Commerce Tax control over any equipment that poses the potential to generate electricity. They're utilizing the 1880's understanding of direct current (DC) electricity which moves through the "flow of electrons," and therefore this gives them direct authority over all generators interconnected to the grid. Using the Quantum Movement Theory of Alternating Current established in 2023, this notion of a flow of electrons does not occur on the grid, and therefore restricts the jurisdiction and the taxing ability of FERC (Wade and Tomomewo, 2023). This change would increase the implementation of Distributed Energy Resources (DERs) and save transmission operators, electric utilities, and ultimately consumers up to $500 million per year over the next several decades.

Keywords: Interstate Commerce Tax, FERC, Electron Theory, Quantum Movement Theory, Energy Policy, Distributed Energy Resources
JEL Classifications: G43, H21, K23

1. INTRODUCTION

The energy industry globally is the backbone for keeping the world moving in ways including but not limited to transportation, communication, commerce, security, health, etc. In 2010, globally the world spent over $6.4 trillion on energy where 19% or $1.2 trillion was spent on energy in North America alone (U.S. Energy Information Administration, 2021) (Enerdata, 2011). According to the United States Energy Information Administration, over 37.7% of energy consumed in the United States is through the electric grid (U.S. Energy Information Administration, 2021). This trillion-dollar industry provides a critical service to communities around the world as well as in the United States and must maintain reliability in order to provide this service. The U.S. electrical infrastructure is recognized as one of the largest and most complex machines in the world, where the U.S. Department of Energy is tasked with maintaining its reliability, efficiency, and affordability to maintain energy security (Bressand, 2013) (U.S. Department of Energy, 2021). In order to accomplish this, there is a complex hierarchy of jurisdictional authorities ranging from federal, regional, state and local levels to effectively manage the electric grid. This structure begins at the top with the U.S. Department of Energy establishing reliability and operational standards through FERC and the North American Electric Reliability Corporation (NERC) (U.S. Department of Energy, 2015). Regional jurisdiction is achieved through Regional Transmission Operators (RTOs) and Independent System Operators that maintain macroscopic grid performance (U.S. Department of Energy, 2015). The next tier consists of transmission and distribution utilities, where in 35 U.S. States, the electric utilities are regulated through the implementation of Public Utility Commissions (PUCs) (Hlinka, 2021). Lastly, consumers or end-users are at the bottom of the spectrum, which includes DERs (U.S. Department of Energy, 2015).

DER implementation is growing at an increasing rate due to many factors including renewable energy scalability, reliability

This Journal is licensed under a Creative Commons Attribution 4.0 International License

interests, micro-grid technology improvements, the need for improved localized power quality, demand response, operational efficiencies, etc. In 2015 the U.S. had 264 MW of DERs in operation, and the current growth rate it is expected to achieve 387 MW of operating DERs by 2025 (Kellison, 2020). As DER saturation increases operationally on the U.S. electric grid, this creates an operational efficiency need to streamline the implementation of DERs. Currently, DERs are regulated through local jurisdictions such as the respective electric utilities and PUCs, where in this manner the localized need is regulated by the localized authorities having jurisdiction. No one is better familiar with the localized needs and resources of the grid than the localities themselves. There have been numerous attempts throughout the recent century to regulate DERs directly through FERC control. This in effect would create unnecessary regulatory procedural inefficiencies and result in fewer DERs being implemented, thus counterintuitive to the very mission of achieving affordable, efficient, and reliable electricity. The basis for this argument used by FERC is relying on the idea of where electrons flow on the grid rather than the energy itself when applied to the topic of interstate commerce. The Quantum Movement Theory of Alternating Current provides a quantum physics basis for understanding that electrons don't flow in an alternating current environment, and therefore FERC should redirect its claim to regulating energy that traverses state lines (Wade and Tomomewo, 2023). This theory provides a scientific basis as to why FERC should not gain direct control of DERs, where this article discusses the legal implications of both sides.

2. BACKGROUND

DER from the terminology using the word "distributed" is in reference to smaller generators that are distributed throughout the grid in various methods. The location and configuration of these DERs can be classified as a few different things depending upon the customer and interconnection method. In general, to be classified as a distributed generation resource the generator has a nameplate rating of <20 MW AC according to NERC (North American Electric Reliability Corporation, 2016). In most instances these generation resources are <10 MW AC. This is mostly due to voltage and conductor sizing limitations to be able to feasibly handle much more distribution of power at voltages ranging from 5kV (5,000V) to 34.5kV (34,500kV) (U.S. Department of Energy, 2015). An example of a typical electric grid structure of a substation and distribution circuit is shown in Figure 1. This single line diagram indicates the inbound transmission feeder to the primary bus at the substation on the left side of the diagram indicating common voltages of 69kV, 115kV, 138kV, or 230kV. The inbound power then passes through a transformer to be stepped down to lower distribution voltages commonly resulting in 12.5kV, 13.8kV, or 34.5kV. On the low side of the transformer at distribution medium voltages you have multiple distribution feeders that branch out to deliver power to the various customers on those circuits. On the secondary side of the transformer, it can be seen that there is a shunt or disconnecting means branching from the secondary bus, another for the distribution circuit as a whole, and lastly at the customer's load which consists of 4 inductive motor loads, electronic loads, and static loads.

Figure 1: Diagram of typical distribution substation with transmission feeds (left) and distribution feeds (right) that serve residential and commercial customers (North American Electric Reliability Corporation, 2016)

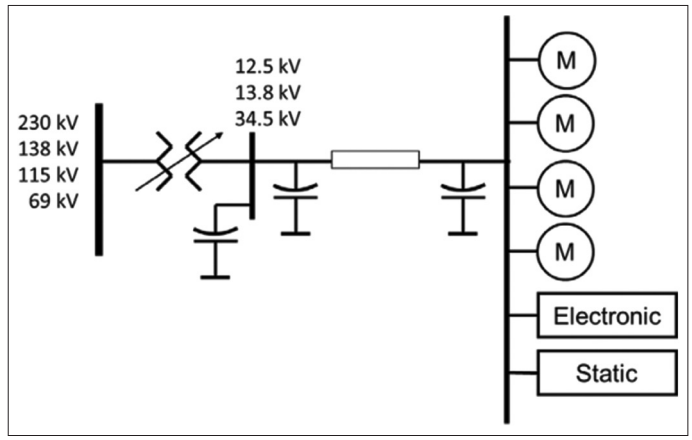

Figure 2: Figure 1 with U-DER and R-DER generator integration methods (North American Electric Reliability Corporation, 2016).

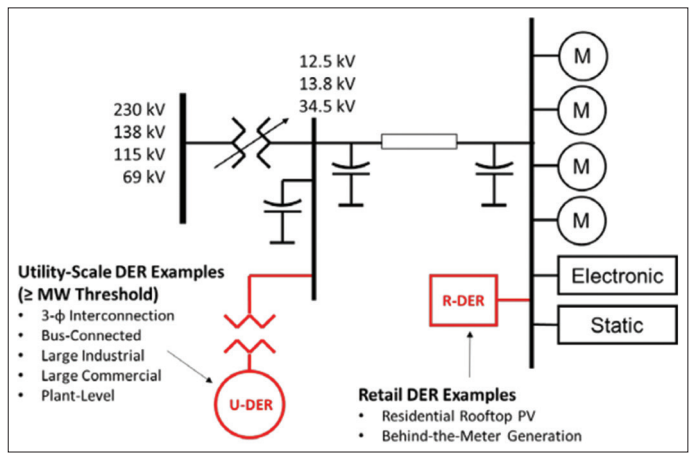

According to the North American Electric Reliability Corporation, a DER can be classified into two different categories of Retail Distributed Energy Resources (R-DER) and Utility Distributed Energy Resources (U-DER) (North American Electric Reliability Corporation, 2016). R-DER is a generation resource interconnected behind the meter at a customer's facility at either single or three phase service and is unlimited by generation nameplate capacity, whereas U-DER is interconnected along the distribution circuit or at the substation secondary bus not located behind the meter and therefore not offsetting customer site load and is generally ranging in nameplate capacity from 0.5MW AC (500kW) to 20MW AC (20,000kW) (North American Electric Reliability Corporation, 2016).

In the R-DER scenario the primary purpose of the DER is to offset the demand and energy located at the customers facility, whether it is a home or business. In the U-DER scenario the owners of those DERs are usually either utilities or investors that are serving utilities that have located the DER in a place that needs that amount of power. This scenario is like the R-DER strategy except the metering point can be viewed as the primary bus of the substation, which

is at transmission voltage. Ideally, the energy generated by the U-DER would never (or be less likely) to impact the transmission system by entering the primary bus within the substation. The very nature of DERs in either R-DER or U-DER techniques is to place generation where it is needed most. This leads to the composite load model created by the North American Electric Reliability Corporation that is shown in Figure 3. This illustration shows how U-DER and R-DER need to be evaluated with consideration of substation secondary bus generation and load values.

There are several ways to evaluate a DER on a substation which can be at the distribution feeder breaker and the main breaker for the secondary bus of the substation. In a conceptual model like what is shown in Figure 3, imagine you have an R-DER that has a nameplate capacity of 1MW AC and a distribution circuit minimum load of 1.5MW AC. In this scenario, the generation from the R-DER should never make it to the distribution circuit feeder breaker and onto the secondary bus, because the load is always greater than the generation supply. This is a simple load-flow analysis understanding for electrical engineering. The same understanding applies to U-DERs interconnected under a dedicated feeder breaker

On to the substation secondary bus shown in Figure 3. In this scenario, imagine that the minimum load on the main breaker of the secondary bus is 5MW AC and the U-DER nameplate capacity is 4MW AC. Using basic engineering principles and understanding of electric current, it can be concluded that the electricity should not move through the transformer and touch the primary bus. This would mean that the electric current would be moving against the overall macro direction of electric movement and therefore back-feeding.

A DER is in itself a complex machine interconnected to a complex system, and like the entire energy industry has to comply with policies and regulations set in place. In many ways, policy is what drives the development of energy resources. This has been

Figure 3: Figures 1 and 2 modified to show the Composite Load Model, which is the recommended method for evaluating cumulative consumer generation and load (North American Electric Reliability Corporation, 2016)

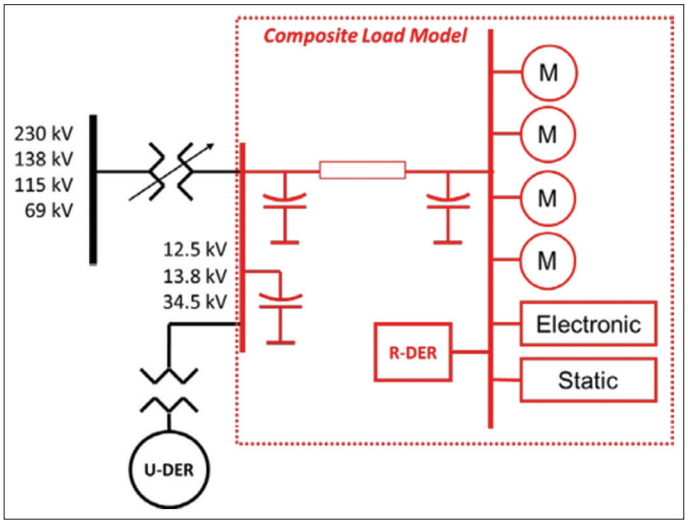

recognized in recent decades with a higher adoption of customer owned generation rather than primarily large, centralized generators owned and/or operated by electric utility providers. This is largely driven by the technological developments in renewable energy and storage technology as well as the financial feasibility for customers to own their own source of power generation. This change in electricity delivery has created new challenges that the regulatory authorities such as the U.S. Department of Energy, Federal Energy Regulatory Commission, North American Electric Reliability Corporation, State Public Service Commissions, Regional Transmission Operators, Independent System Operators, and electric utilities will have to adapt to.

The primary reason that DERs are a challenge for policy regulators and electric utilities is due to the change in the movement of electricity. Traditionally, electric energy was operated and managed by electric utilities and strategized in a way that electric energy is generated at a large power station, transmitted at high voltages over longer distances, transformed to lower voltages and distributed to local homes and business at their required service levels. In this sense, electricity flowed in "one direction" from the generator to the ultimate end user. The energy transition began to pick up speed in the 1990's when homeowners and businesses found it to become common place to install a backup generator on their home ran from either diesel or natural gas. As prices lowered and it thus became more feasible to have reliable backup power, more and more individuals began utilizing them. As rates for electric demand increased over time, large businesses found it more and more enticing to utilize behind-the-meter power generation to lower their demand charges. This practice is commonly known as peak shaving or demand shedding and consists of the customer lowering their overall peak demand in a way that allows them to save money on their electric utility bills. Around the turn of the century in the early 2000's, solar started emerging as an acceptable power generation resource that businesses could implement for peak demand shaving purposes as well as public relations claims (U.S. Department of Energy, n.d.). The current market has reached a time where customer owned generation is becoming more commonplace and therefore states began establishing net-metering policies to allow customers to generate their own energy and be a net-zero electric user from the grid on an annual basis. This new rate schedule defining compensation for customer owned generation and federal tax incentives for renewable energy gave solar and wind a boost for quicker adoption rates among consumers. From 2010 to 2020 alone, the National Renewable Energy Laboratory reported decreased costs for turnkey residential solar projects by over 64% and commercial projects by over 69% (Feldman et al., 2021). As energy storage continues to decrease as well, this is driving the rapidly increasing deployment of DERs in the United States (Kellison, 2020). With this background in development, it can be seen why there is a concern between the traditional notion of "one direction" of power now transitioning to a "two direction" movement of power.

3. QUANTUM MOVEMENT THEORY

The Quantum Movement Theory of Alternating Current was developed during 2021-2022 by Cooper R. Wade and established

in 2023 (Wade and Tomomewo, 2023). This theory established two equations that allow the movement of electrons to be quantified based upon the macroscopic movement of energy in any system, more effectively with regards to this research is applying this theory to the impact of electron movement due to energy generated by DERs. The two equations developed allow insight into: (1) the number of electrons moved given a specific amount of energy and (2) the distance these electrons traveled given the same amount of energy.

Equation 1 shown below will result in the amount of electrons moved given a specific amount of energy in an electric environment:

$$e_n = \frac{Iq}{2f} \tag{1}$$

Equation 2 shown below will result in the distance that the electrons moved given a specific amount of energy in an electric environment:

$$d = \frac{IqAw}{2fd_m e_a} \tag{2}$$

The variables indicated in the previous equations are shown in Table 1 with their respective constant values and corresponding units.

A previous study conducted two examples utilizing this theory for the following scenario with a current of 20 Amps of alternating current moving through a 12-gauge copper conductor at a frequency of 60 Hertz. The amount of electrons necessary to move this amount of energy was found to be 1.0402515×10^{18} electrons oscillating through a cross-sectional area of a wire. The distance traveled by these same electrons was found to be $4.063322 \times 10^{-6\ cm}$ that the oscillating electrons traveled in either direction inside of the conductor given the specific energy moved.

This theory directly supports and promotes the notion that electrons don't flow. This theory provides a significant mathematical breakthrough that allows anyone the ability to calculate the movement of electrons in both direct current and alternating current by modifying the respective frequency. When performed, the results demonstrate electron behavior and allow researchers to interpret electron movement in various environments.

The concept of a "flow" of electrons as previously mentioned and discussed further in the following sections, is proven incorrect by Equations 1 and 2 developed by the Quantum Movement Theory. It is only logical that the policies used to regulate the electric energy industry in the United States are appropriately based upon the science of how electric energy moves.

Table 1: Variables and values

Symbol	Variable	Value/units
I	Current	Amps
q	Coulombs	$1C=6.241509 \times 10^{18}$ Electrons
a	Surface Area of Conductor	cm^2
w	Atomic Weight	grams (g)
f	Frequency	60 Hertz
d_m	Material Density	g/cm^3
e_a	Free Electrons	1 Electron/Atom (e/a)
d	Distance	To Be Calculated (cm)
e_n	Number of Electrons	To Be Calculated

4. FEDERAL AND STATE JURISDICTION

In the early 1900's, the United States federal government determined that due to the growing gas and electric utility industries they needed to set in place an appropriate regulatory structure. The Federal Power Act established the framework to set in place federal regulation of the electric grid in the United States on June 10, 1920 (Federal Power Act, 1920) This federal regulation of the electric industry was passed onto the responsibility of the Federal Power Commission until being transferred into the Federal Energy Regulatory Commission in 1977 (Greer, 2022) (Greenfield, 2018). The purpose of their incorporation according to the Federal Power Act is to regulate the interstate commerce of electricity and charge an interstate commerce tax for such electricity as established in Parts II and III of the Federal Power Act (Federal Power Act, 1920). In 1935, the Federal Power Act was revised to more explicitly draw the line between federal and state jurisdictions of electric power delivery and outlined FERC's jurisdiction as the following in Section 201 (b) (1):

"Authority to regulate 'the transmission of electric energy in interstate commerce' and 'the sale of electric energy at wholesale in interstate commerce'" (Dennis et al., 2016).

Further continued in section 201 (b) (1), the United States Congress explicitly excluded the following electric grid infrastructure from federal regulation:

1. "Facilities used for the generation of electricity
2. Facilities used for local distribution of power to retail customers
3. Facilities used for transmission of electricity strictly in intrastate commerce, and
4. Transmissions of electricity to be used entirely by the transmitter" (Dennis et al., 2016).

And lastly clarifying once again in Section 201 (a):

"[f]ederal regulation. ..extend [s] only to those matters which are not subject to regulation by the states" (Dennis et al., 2016).

It can be clearly and explicitly seen based on the previous three cited statements from Section 201 of the Federal Power Act of 1930 that the federal government has no jurisdiction over electricity that doesn't cross state lines.

Throughout the decades since the passing of the Federal Power Acts of 1920 and 1930, the lines separating federal and state jurisdiction over the regulation of electric infrastructure has become less black and white and more grey. When these laws and regulations are written there are always special case scenarios that can be reviewed and granted depending upon application. This has happened several times in the last century, which has contested the jurisdictional boundary. There have been a large amount of FERC proceedings, briefings, federal court rulings, and Supreme

Court cases that have influenced the jurisdictional boundary. Early on, FERC has tried to expand its regulatory jurisdiction such as in 1951 in Federal Court for Wisconsin-Michigan Power Co. v. FPC, where FERC:

"Rejected an argument that it did not have authority over certain wholesale energy sales because the energy only traversed facilities used for local distribution in the state where the energy was consumed. FERC explained that 'nothing in the [FPA] makes our jurisdiction. over sales of electric energy dependent upon the nature of the facilities involved in effecting the sale'" (Peskoe, 2018).

This continues explicitly in a FERC proceeding in 1965 for Indiana and Michigan Electric Co. (33 FPC 739), where FERC:

"Rejected similar argument, holding that 'there is nothing in the Power Act that makes Commission jurisdiction over sales dependent on whether the facilities used are local distribution facilities" (Peskoe, 2018).

In these examples FERC has maintained that their jurisdiction is based upon the type of sale, being wholesale energy, and not based upon the transfer of electricity over a state border. This directly goes against what Congress mandated in 1920 and 1935 in the Federal Power Act. This has been challenged many times over the years by electric utilities, public service commissions, regional transmission operators, and industry associations, where FERC has been able to maintain its posture on regulating wholesale electricity.

In 2010, this jurisdictional debate was directly challenged in FERC Docket EL10-64-000 by the petition to intervene from the Sacramento Utilities District where they argued:

"Sales of energy by a DER should not be subject to FERC's jurisdiction because they are not 'in interstate commerce.' The utility argued that 'as a physical matter sales of power over lower voltage distribution wires are unlikely, on account of impedance, to enter the [interstate] bulk power system.' It cautioned that 'a decision asserting Commission jurisdiction over all distribution-level power sales to utilities would necessarily bring within the Commission's regulatory reach literally millions of homeowners, farmers or businesses. who sell power to their local utility'" (Peskoe, 2018).

The petition was denied, but their argument is justified. If FERC is using the concept of having a unified and interconnected electric grid as a vague reason to extend their regulating reach to become further within state borders and impact every consumer with a generation source, then they must do it from a systems operation approach. The argument that generation from someone's home will impact the greater electric grid and become interstate commerce is highly improbable of occurring. FERC has ascertained that since it is technically possible for electricity from a DER to make it into a wholesale energy transaction then it should have jurisdiction over all of the consumers that could impact the interstate system. The California Public Utilities Commission clarifies FERC's intentions to regulate DERs in the same docket: (Docket No. EL10-64-000, 2010).

"The Commission's FPA authority to regulate sales for resale of electric energy and transmission in interstate commerce by public utilities is not dependent on the location of generation or transmission facilities, but rather on the definition of, as particularly relevant here, wholesale sales contained in the FPA" (132 FERC 61,047, 2010).

It is made clear that overtime the envelope has been continuously pushed for FERC to take on more and more regulatory authority from the state's control. The next question that arises is, "on what basis does FERC determine that DERs have a large impact to the bulk transmission system and therefore interstate commerce?" This what forms the base that is the problem being addressed in this research and outlined in the following section.

5. POLICY PROBLEM

Currently, FERC has used the argument of regulating "any wholesale electricity" transaction, while not considering the "in interstate commerce" clause, to achieve the jurisdictional authority to regulate any wholesale electricity transaction between utilities even if it is within the same state border. This is a continuing argument and very relevant to the increased development and installation of DERs on the electric grid. If FERC was responsible for regulating DERs of any type including R-DER and U-DER, then this would be a massive inhibitor to constructing DERs. From the simplest perspective there would at least be applied interstate commerce taxes and longer approval timelines which increase development and operations costs. This prompts the question, "how does FERC justify regulating DERs when they're designed for localized power distribution and interconnected on medium voltage distribution lines?" The reasoning that is used by FERC can be summarized in two major points:

1. The electric grid is one large, interconnected grid including distribution, transmission, and generation
2. The "flow of electrons" or "electron flow" from DERs can go anywhere.

Point (1) that is mentioned, is technically true. The modern electric grid is one large interconnected complex machine. Point (2) is incorrect by nature, whereas electrons in an alternating current system do not "flow" in fact there is no "flow of electrons", but rather an oscillation. Legal research conducted during this evaluation has found 323 times that FERC/FPC has recognized the "flow of electrons" or "electron flow" in any sense during a court case, docket, or briefing. This statement relating the "flow of electrons" to the electric grid became common place during the late 1800's when most of the electric grid consisted of direct current power generation, delivery, and consumption rather than alternating current. However, the modern electric grid consists primarily of alternating current compatible components, and the correct argument should be used to regulate such components. Since the location of the "flow of electrons" is the determining factor that indicates whether electricity from a DER impacts the bulk electric system in interstate commerce, this is the focal point of this research.

To summarize, the problem is that the determining factor being used to justify FERC jurisdictional boundary is relying on the

"flow of electrons". Quantum Movement Theory applied to electrical concepts does not allow for any "flow of electrons" in an alternating current electric grid. There is power flow that occurs 24/7 on the electric grid from DERs, however the purpose of DERs is to serve local areas at medium voltages. There are scenarios where DER power generation can exceed the localized load, but this is not a design standard for DERs to transmit power over long distances. If they do, then that amount that traverses a state border would be subject to interstate commerce tax. To reiterate, the design purpose of a DER is to serve a localized area and in current scenarios should not continuously export to the transmission system.

The current FERC jurisdiction as it stands does not represent wholesale electricity transactions, but actually wholesale transactions between utilities including intrastate commerce. Spreading the impact to include all R-DER and U-DER would greatly impact development and installation of new generation assets. Individual consumers such as homeowners and businesses would not want the added requirements, timeframes, and cost implications (taxes and other indirect cost factors) that would follow with doing so. Figure 4 illustrates a flowchart that shows the jurisdictional boundary as it currently stands. In essence, what this indicates is if the DER does not offset consumption for a specified consumer within the utility it is interconnected to then it is subject to FERC authority (excluding PURPA Qualified Facilities). Under this representation all consumer owned DERs that are designed to offset consumption would avoid federal regulation, which includes homes and businesses. PURPA facilities are different and are outlined in the Public Utilities Regulatory Policies Act of 1978, which is where the acronym PURPA comes from (United States Congress, 1978). A PURPA Qualifying Facility is one that is either a cogeneration facility generating electricity and another form of useful thermal energy or a small power production facility consisting of a renewable generation source located within a mile of the load source where the generation amount does not exceed the load up to 80 MW AC (Federal Energy Regulatory Commission, n.d.). These facilities are able to get.

Figure 4: Flowchart indicating whether a specified DER is subject to state or federal regulation (Peskoe, 2018).

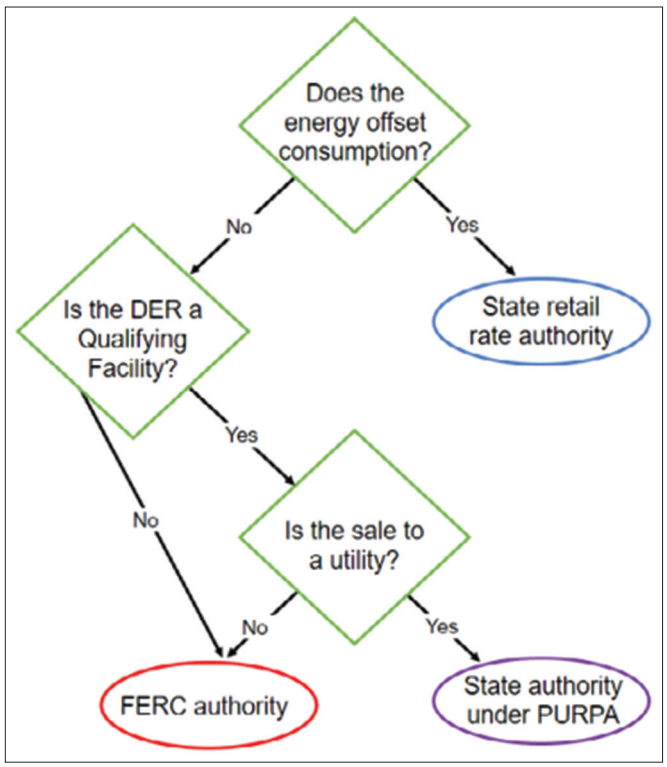

Fast-tracked approval for implementation and are granted avoided cost rates (generally wholesale) from the interconnected utility. These facilities are able to get special treatment and avoid FERC authority. This is not seen as a "sale for re-sale" of electricity, which has been the common concern for classifying net metered DERs under FERC regulation. The argument is that overgeneration is considered wholesale power due to the fact that the utility is delivering it to another customer even when the "transaction" was not at wholesale rates.

If FERC receives the jurisdictional boundary they are seeking by using the "electron flow" argument, then they will regulate any consumer owned power generation source no matter if they export to the distribution grid or not. This situation is represented well on March 26, 1941, in Supreme Court Case, Connecticut Light and Power Co. v. Federal Power Commission (324 U.S. 515), where Connecticut Light and Power Co. states: (324 U.S. 515, 1945).

"Federal jurisdiction was to follow the flow of electric energy, an engineering and scientific, rather than a legalistic or governmental, test…Every facility from generator to the appliance for consumption may thus be called one for transmitting such interstate power. By this test the cord from a light plug to a toaster on the breakfast table is a facility for transmission of interstate energy if any part of the load is generated without the state. It has never been questioned that technologically generation, transmission, distribution and consumption are so fused and interdependent that the whole enterprise is within the reach of the commerce power of Congress, either on the basis that it is, or that it affects, interstate commerce, if at any point it crosses a state line" (324 U.S. 515, 1945).

This argument relies heavily on the "uncertainty" of electron movement and doesn't place much weight on the dependency for energy movement between states to necessitate jurisdictional claim over it. In 2019, there were over 2,000,000 commercial and industrial solar arrays installed and operating that were either U-DER or R-DER in style, and if this jurisdictional change were to be implemented then all of these home and business owners would be subject to federal energy regulations (Merchant, 2019). That is just for solar alone and does not include any other grid-interactive generation source that consumers may have installed. The original intent of Congress under the Federal Power Act was not to regulate individual end customers, but to regulate wholesale market transactions, whereas this jurisdictional change would directly go against that.

The Interstate Commerce Act was passed on February 4, 1887, which preemptively gave the federal government power "'to Regulate Commerce with foreign Nations, and among the several

States'" including taxing authority (United States Senate, n.d.). It wasn't until 1920 that the Federal Power Commission was established to regulate and tax electricity in interstate commerce. Interstate Commerce Taxes are assessed once a year or per quarterly basis depending on operator via wholesale energy transaction data provided by transmission owners/operators per FERC's rules and regulations. This is done through the submittal of data from electric utilities to their respective RTOs/ISOs and each submits a FERC Form 1, which are evaluated by FERC. It is then verified which tax rate will be charged per GWh reported of wholesale.

Transactions across all RTOs/ISOs in order to reach the actual amount of taxes needing to be collected versus the budgeted amount. Figure 5 contains the Interstate Commerce Tax data for every GWh reported to be sold in wholesale transactions from 2010 to 2020 compared to the cumulative GWh generated in the United States. It is to be noted that detailed data for years 2013 and 2014 that matched the format and granularity for years 2010-2012 and 2015-2020 was unable to be retrieved from FERC. From 2010 to 2020 there has been both an increase in the proportion of taxed energy versus total generation as well as the cumulative taxes collected. During this timeframe of 11 reporting years, cumulative interstate commerce taxes have increased by over 42% and the proportion of taxed energy vs. total generated energy has increased by over 12% during this time, while total energy production has maintained relatively the same over this period. If proposed jurisdictional changes take place, it will be a significant increase in the amount of data processing that will occur through FERC and therefore increase taxes paid by DER owners. Based on the estimates in Figure 6 it is clear that taxes will continue to soar and exponentially more so if jurisdictional shifts occur towards the regulation of DERs.

6. CONCLUSION

The application of this research is to show what behavior the electron as a particle is having within an alternating current electric grid, which will assist in determining the solution to this policy issue. The hypothesis is that given a cumulative DER generation load that is lower than the cumulative substation load as measured on the substation secondary bus, then the overall movement of electricity will be an importing of electricity from the transmission system and not a net-export of electricity onto the transmission system. This would result in no net energy flow onto the grid and therefore no electron movement onto the grid. It would force those using the "electron flow" or "flow of electron" argument to change the basis for their reasoning or succumb to the understanding that electricity works differently than how it is currently being outlined. Even in the event of a net-exporting of energy to occur onto the transmission system, then the magnitude that there is electron movement occurring is insignificantly small.

Policy and regulations have huge implications on the energy industry with regards to the development of technology and speed of deployment. The current policies set in place at both the federal and state levels are not perfect but work to address issues at their given level without needing to move further up the food chain.

Figure 5: Chart indicating Interstate Commerce Tax collected for years 2015-2020, with forecasted amounts for years 2030, 2040, and 2050 based on historical increases at a 95% confidence interval.

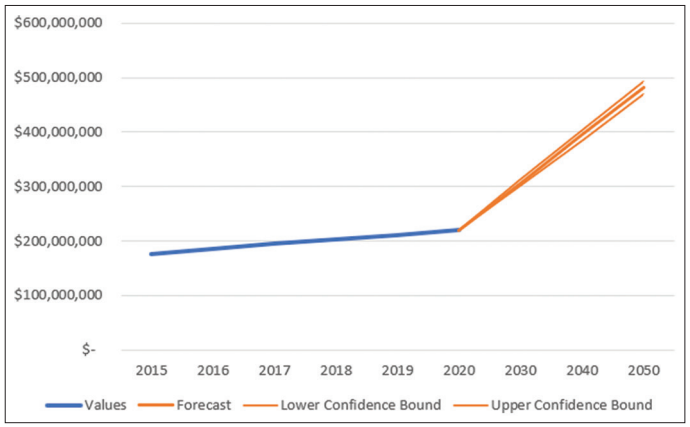

Figure 6: Chart indicating Federal and State jurisdiction over the electric industry at its current status.

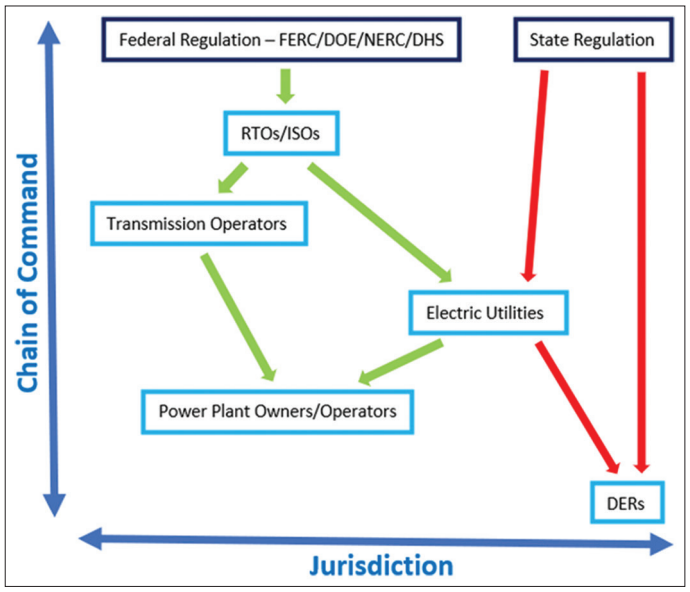

With DERs this could not be more true, because as the world grows into an increasingly carbonless world, energy plays a huge role in that. Every year, more consumers and companies are setting and establishing renewable energy or carbon neutrality goals. Solar, wind, and energy storage technologies would not have grown as much as they have without proper policy to support them. Figure 6 demonstrates the policy structure that allowed this to happen. Cohesively, the federal government was able to set goals and incentives at the federal level to get this accomplished, and the state level governments adapted and implemented policies that worked for their localized needs and interests. Whereas Figure 7 represents the structure where FERC takes control over DER generation. If that is the case, then FERC has essentially gone from overseeing only large energy transactions to now including the smallest energy transactions. The question has to be asked, "what role does the state have left to play in this?" In this scenario, there wouldn't be much reason to maintain any state regulation since their authority has essentially been stripped with the exception of maintaining some control over consumer rate regulation to ensure market fairness.

Figure 7: Chart indicating what Federal and State jurisdiction would look like if FERC's authoritative jurisdiction is changed to regulate DERs

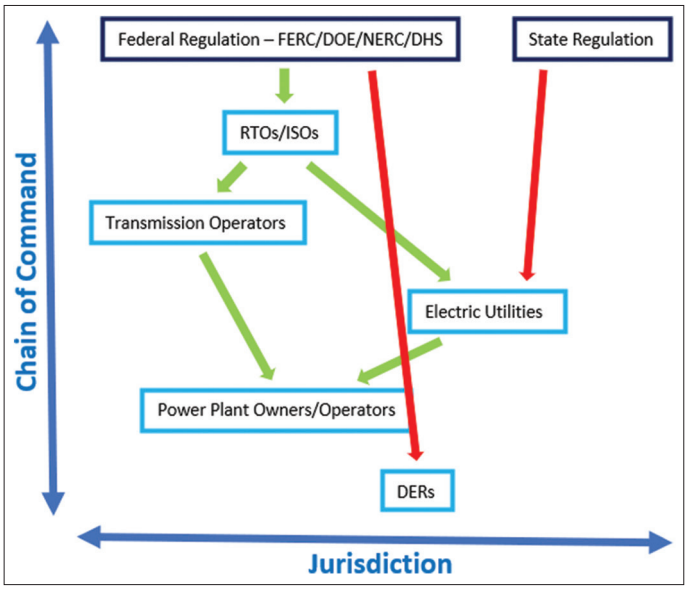

In summary, the "electron flow" or "flow of electrons" argument is incorrect based upon the hypothesis of this research, whereas the focus should be turned to the flow of electrical energy. With DERs, the flow of electrical energy is also up for debate given the nature of DERs to be to provide localized power generation not intended for long distance transmission and delivery. Either way, the notion of DERs transmitting across state lines in wholesale transactions is unlikely and unintended.

The policy debate at hand is between who should regulate DERs, the federal or local authorities having jurisdiction. It is reasonable to expect DERs to continue to gain saturation on the grid as well as market share. Due to this, FERC wants to increase controllership over these resources more so than the current level of control. Their current control extends only to DERs actively participating in wholesale markets and the ability to develop standards and procedures for DERs to follow nationally. In this method, FERC establishes guidelines that states, local jurisdictions, grid operators, and electric utilities adopt according to their local/regional need. This process is currently not in need of repair and shouldn't be subjected to unnecessary regulatory inefficiencies by assigning FERC direct authority over all DERs. As discussed, the argument being used to support the federal claim of deserving control over all DERs is incorrect in nature and is based upon a law written when the understanding was that electric energy moves via a flow of electrons as the grid was previously lead by direct current technology rather than alternating current.

The Quantum Movement Theory provides clarity and understanding for what is occurring inside of an electrified conductor (Wade and Tomomewo, 2023). This theory refutes the claim by federal regulators to assert authority over localized power generation within the states' borders. Therefore, the basis for federal regulation should be shifted to managing energy resources rather than the quantum particles serving as the building blocks that allow the system to operate. Either way, the consensus remains the same.

As the world progresses and technological breakthroughs continue to change, these types of discussions should be welcomed. Depending upon perspective, this argument can appear pointless, however this is a valuable part of the energy industry in the United States. The ability to discuss recurring issues overtime provides the energy industry with a structure of "checks and balances" that allow policies and regulatory authorities to adapt as the needs change overtime. In this manner, industry can continue to have these debates which helps further ensure that the decisions being made are the correct ones for U.S. taxpayers. This article serves as a part of this recurring "checks and balances" as the industry continues to develop together. No policy is perfect in any scenario and every policy remains relative to the time of enactment.

7. ACKNOWLEDGMENT

C. R. Wade thanks the support of his family, friends, educators, and colleagues in this endeavor to further expand the knowledge base of quantum physics in electrical systems and the implications thereof on energy policy.

REFERENCES

132. FERC 61,047. (2010), Available from: https://www.dwt.com/files/uploads/documents/advisories/10-10_caiso_0715.pdf

Amendment to Motion to Intervene of the Sacramento Utility District, Docket No. EL10-64-000 (2010). Available from: https://casetext.com/case/sacramento-municipal-utility-district-v-us-5.

Bressand, A. (2013), In: Goldthau, A., editor. The Handbook of Global Energy Policy. United States: Wiley Blackwell.

Connecticut Light and Power Co. Federal Power Commission (324 U.S. 515). (1945), Available from: https://supreme.justia.com/cases/federal/us/324/515

Dennis, J., Kelly, S., Nordhaus, R., Smith, D. (2016), Federal/State Jurisdictional Split: Implications for Emerging Electricity Technologies. United States: Lawrence Berkeley National Laboratory. Available from: https://www.energy.gov/sites/prod/files/2017/01/f34/federal%20state%20jurisdictional%20split--implications%20for%20emerging%20electricity%20technologies.pdf

Enerdata: Intelligence + Consulting. (2011), World Energy Expenditures. Available from: https://www.enerdata.net/publications/executive-briefing/world-energy-expenditures.html#:~:text=more%20than%20us%246%2c000bn,and%20in%20some%20cases%20first

Federal Energy Regulatory Commission. (2022), PURPA Qualifying Facilities. Available from: https://www.ferc.gov/qf

Federal Power Act. (1920), Available from: https://www.energy.gov/sites/prod/files/2019/10/f67/Federal%20Power%20Act_2019_508_0.pdf

Feldman, D., Ramasamy, V., Fu, R., Ramdas, A., Desai, J., Margolis, R. (2021), U.S. Solar Photovoltaic System and Energy Storage Cost Benchmark: Q1 2020. United States: National Renewable Energy Laboratory. Available from: https://www.nrel.gov/docs/fy21osti/77324.pdf

Greenfield, L.R. (2018), An Overview of the Federal Energy Regulatory Commission and Federal Regulation of Public Utilities. United States: Federal Energy Regulatory Commission. Available from: https://www.ferc.gov/sites/default/files/2020-07/ferc101.pdf

Greer, M. (2022), State Regulations, Policies, and Updates on States with Retail Choice. Available from: https://www.sciencedirect.com/science/article/pii/B9780128213650000232

Hlinka, M. (2021), US Utility Commissioners: Who They are and How They Impact Regulation. S&P Global: Market Intelligence. Available from: https://www.spglobal.com/marketintelligence/en/news-insights/blog/us-utility-commissioners-who-they-are-and-how-they-impact-regulation

Kellison, B. (2020), The Next Five Years Will See Massive Distributed Energy Resource Growth: The Momentum is Clear, Despite COVID-19 Impacts in 2021. United Kingdom: Wood Mackenzie. Available from: https://www.woodmac.com/news/editorial/der-growth-united-states/#:~:text=The%20report%20also%20finds%20that,a%20new%20peak%20in%202025

Merchant, E. (2019), US Surpasses 2 Million Solar Installations as Industry Looks to 'Dominate' the 2020s. United States: GreenTech Media. Available from: https://www.greentechmedia.com/articles/read/u-s-solar-installations-top-2-million

North American Electric Reliability Corporation. (2016), Reliability Guideline: Modeling Distributed Energy Resources in Dynamic Load Models. Available from: https://www.nerc.com/comm/pc_reliability_guidelines_dl/reliability_guideline_-_modeling_der_in_dynamic_load_models_-_final.pdf

Peskoe, A. (2018), The Case against Direct FERC Regulation of Distributed Energy Resources. United States: Harvard Law School. Available from: http://eelp.law.harvard.edu/wp-content/uploads/the-case-against-direct-ferc-regulation-of-distributed-energy-resources-pdf

U.S. Department of Energy. (2021), A Reliable, Affordable Clean Power Sector is Here. It's Time to Invest in the Future. Available from: https://www.energy.gov/articles/reliable-affordable-clean-power-sector-here-its-time-invest-future

U.S. Energy Information Administration. (2021), U.S. Energy Consumption by Source and Sector, 2021. Available from: https://www.eia.gov/energyexplained/us-energy-facts/images/consumption-by-source-and-sector.pdf

United States Congress. (1978), H.R.4018-Public Utility Regulatory Policies Act. Available from: https://www.congress.gov/bill/95th-congress/house-bill/4018

United States Department of Energy. (2022), The History of Solar. Available from: https://www1.eere.energy.gov/solar/pdfs/solar_timeline.pdf

United States Department of Energy: Office of Electricity Delivery and Energy Reliability. (2015), United States Electricity Industry Primer. Available from: https://www.energy.gov/sites/prod/files/2015/12/f28/united-states-electricity-industry-primer.pdf

United States Senate. (2022), The Interstate Commerce Act is Passed. Available from: https://www.senate.gov/artandhistory/history/minute/interstate_commerce_act_is_passed.htm

Wade, C., Tomomewo, O. (2023), Quantum movement theory of alternating current. American Journal of Energy Research, 11(1), 31-37.